Product datasheet
Characteristics

STBACI1400K
standard analog input kit STB - 4..20 mA - 8 I - 15 bits + sign

Price* : 322.00 GBP

Main

Range of product	Modicon STB distributed I/O solution
Product or component type	Standard analog input kit
Kit composition	STBACI1400 module STBXBA2000 base STBXTS1100, 6-terminal screw type connector STBXTS2100, 6-terminal spring clamp connector
Analogue input type	Current 0...20 mA Current 4...20 mA
Analogue input number	8
Analogue input resolution	15 bits + sign
Type of filter	Single low pass input filter 985 Hz

Complementary

Absolute maximum input	25 mA/50 V DC
Cold swapping	Yes
Hot swapping fallback	Yes for standard NIMs
Fallback status	State 0 basic NIMs User configurable standard NIMs
Data format	EN 61131-2 IEC 61131-2
Update time	22 ms
Integral linearity	+/- 0.08 %FS
Differential linearity	Monotonic
Input impedance	<= 250 Ohm
Supply current for sensors	100 mA per input channels
Absolute accuracy error	+/- 0.4 % of full scale per °C
Temperature drift	+/-0.005 %/°C
Insulation between channels and logic bus	1500 V for 1 minute

Disclaimer: This documentation is not intended as a substitute for and is not to be used for determining suitability or reliability of these products for specific user applications

Insulation between channels and sensor bus	30 V
Addressing requirement	16 input words
Product compatibility	Mounting base STBXBA2000 Power distribution module STBPDT3100/3105
[Us] rated supply voltage	24 V DC
Supply	Power distribution module
Current consumption	90 mA 5 V DC logic bus
Marking	CE
Overvoltage category	II
Status LED	1 LED green module status (RDY)
Depth	70 mm
Height	18.4 mm
Width	128.3 mm

Environment

Product certifications	ATEX Cat 3G CSA C-Tick FM Class 1 Division 2 UL
Pollution degree	2 IEC 60664-1
Operating altitude	<= 2000 m
IP degree of protection	IP20 EN 61131-2 class 1
Ambient air temperature for operation	-25...70 °C
Ambient air temperature for operation	- 13...158 °F
Ambient air temperature for storage	-40...85 °C without
Ambient air temperature for storage	-40...185 °F without
Relative humidity	95 % 60 °C without condensation
Vibration resistance	+/-0.35 mm 10...58 Hz 3 gn 58...150 Hz 35 x 7.5 mm symmetrical DIN rail 5 gn 58...150 Hz 35 x 15 mm symmetrical DIN rail
Shock resistance	30 gn 11 ms IEC 88 reference 2-27

Offer Sustainability

Sustainable offer status	Green Premium product
RoHS (date code: YYWW)	Compliant - since 0906 - Schneider Electric declaration of conformity Schneider Electric declaration of conformity
REACh	Reference not containing SVHC above the threshold Reference not containing SVHC above the threshold
Product environmental profile	Available Product environmental
Product end of life instructions	Available End of life manual

Contractual warranty

Warranty period	18 months

STBACI1400K

Dimensions

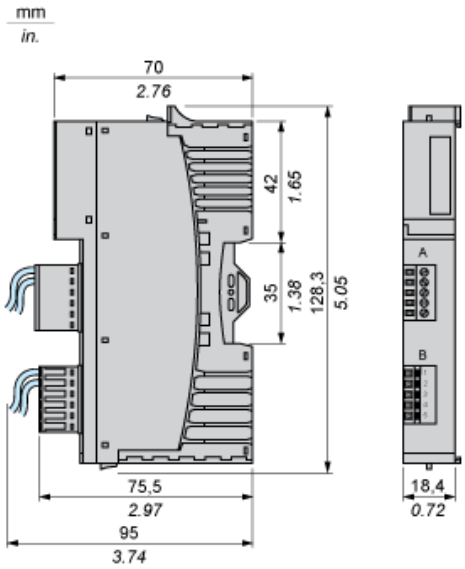

Wiring Diagram

Example

8 isolated analog sensors, external 24 VDC power supply

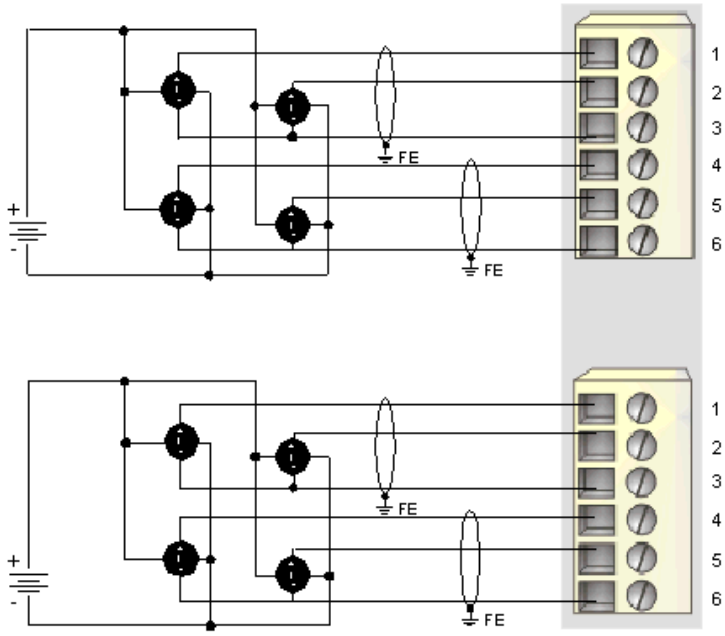

Pin	Top Connections	Bottom Connections
1	current in 1	current in 5
2	current in 2	current in 6
3	return	return
4	current in 3	current in 7
5	current in 4	current in 8
6	return	return