SIEMENS

Data sheet 4NC5122-0DE21

current transformer 200/1A 5 VA KL0.5

Model	
product brand name	SENTRON
product designation	Current transformer
design of the product	Bushing-type current transformers
operating apparent power rated value	5 VA
Protection class	
protection class IP	IP20
Connections	
type of electrical connection at output	screw-type terminals
Mechanical Design	
height	75 mm
height of the opening	10 mm
width	60 mm
width of the push-through bus bar at 1 bus bar maximum	20 mm
width of the push-through bus bar in case of 2 bus bars maximum	20 mm
depth	55 mm
fastening method	screw fixing
diameter of inlet opening	19 mm
outer diameter of the push-through conductor maximum	19 mm
net weight	480 g
Environmental conditions	
ambient temperature during operation	
● minimum	-30 °C
● maximum	55 °C
Certificates	
reference code according to EN 61346-2	T

General Product Approval	Declaration of Conformity		other	
Confirmation			Confirmation	Miscellaneous

Further information

Information on the packaging
https://support.industry.siemens.com/cs/ww/en/view/109813875
Information- and Downloadcenter (Catalogs, Brochures,…)
http://www.siemens.com/lowvoltage/catalogs
Industry Mall (Online ordering system)

Subject to change without notice
© Copyright Siemens

https://mall.industry.siemens.com/mall/en/en/Catalog/product?mlfb=4NC5122-0DE21

Service&Support (Manuals, Certificates, Characteristics, FAQs,...)

https://support.industry.siemens.com/cs/ww/en/ps/4NC5122-0DE21

Image database (product images, 2D dimension drawings, 3D models, device circuit diagrams, ...)

http://www.automation.siemens.com/bilddb/cax_en.aspx?mlfb=4NC5122-0DE21

CAx-Online-Generator

http://www.siemens.com/cax

Tender specifications

http://www.siemens.com/specifications

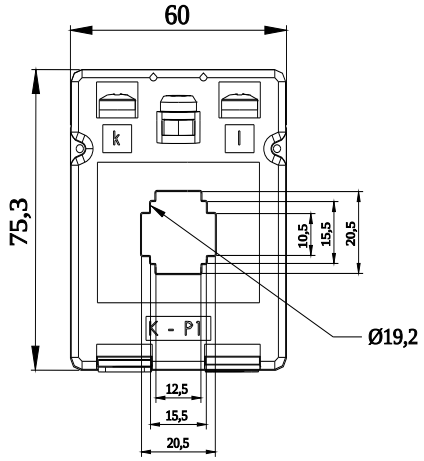

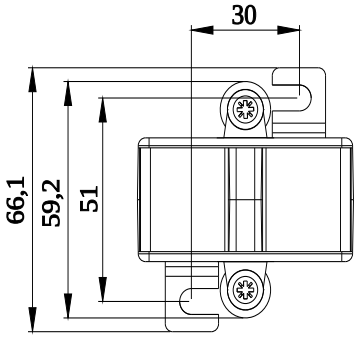

Subject to change without notice
© Copyright Siemens

Subject to change without notice
© Copyright Siemens