IFM204

Inductive sensor

IFKC007-ASKG/M/US-104-DRS

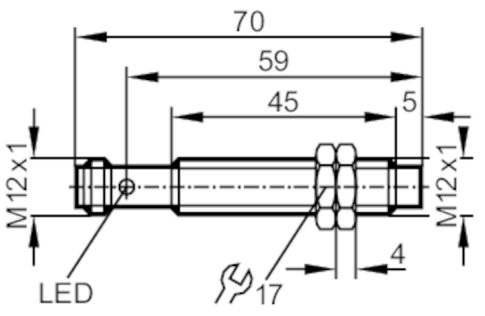

Electrical data		
Operating voltage	[V]	10...36 DC
Current consumption	[mA]	< 10; (only in 3-wire operation)
Protection class		II
Reverse polarity protection		yes
Outputs		
Output function		normally open
Max. voltage drop switching output DC	[V]	2.5
Minimum load current	[mA]	2; (only in 2-wire operation)
Max. leakage current	[mA]	0.5; (only in 2-wire operation)
Permanent current rating of switching output DC	[mA]	100
Switching frequency DC	[Hz]	300
Electrical design		PNP/NPN
Short-circuit protection		yes
Type of short-circuit protection		pulsed
Overload protection		yes
Range		
Sensing range	[mm]	7
Real sensing range Sr	[mm]	7 ± 10 %
Operating distance	[mm]	0...5.67
Increased sensing range		yes
Accuracy / deviations		
Correction factor		steel: 1 / stainless steel: 0.7 / brass: 0.5 / aluminium: 0.5 / copper: 0.4
Hysteresis	[% of Sr]	1...20
Switch point drift	[% of Sr]	-10...10
Operating conditions		
Ambient temperature	[°C]	-40...85
Protection		IP 67; IP 69K

IFM204

Inductive sensor

IFKC007-ASKG/M/US-104-DRS

Tests / approvals		
EMC	automotive area	
	noise emission and noise interference according to the automotive directive 95/54/EC	E1 type approval
	noise immunity according to DIN ISO 11452-2	100 V/m
	conducted interference acc. to ISO 7637-2	
	pulse	1 2 3a 3b 4 5
	severity level	IV IV IV IV IV IV
	failure criterion	C C A A A C
	EN 61000-4-2 ESD	4 kV CD / 8 kV AD
	EN 61000-4-3 HF radiated	10 V/m
	EN 61000-4-4 Burst	2 kV
	EN 61000-4-5 Surge	0,5 kV line to line, Ri: 2 Ohm
	EN 61000-4-6 HF conducted	10 V
	EN 55011	class B
Vibration resistance	EN 60068-2-6 Fc	20 g (10...3000 Hz) / -20...50 °C
		50 sweep cycles per frequency; 1 octave per minute in 3 axes
Shock resistance	EN 60068-2-27 Ea	100 g 11 ms half-sine; 3 shocks each in every direction of the 3 coordinate axes / -40...85 °C
Continuous shock resistance	EN 60068-2-29 Eb	40 g 6 ms; 4000 shocks each in every direction of the 3 coordinate axes / -20...50 °C
Fast temperature changes	EN 60068-2-14 Na	TA = -40 °C; TB = 85 °C; t1 = 30 min; t2 = < 10 s; 50 cycles
Salt spray test	EN 60068-2-52 Kb	severity level 5 (4 test cycles)
MTTF [years]	694	
Mechanical data		
Weight [g]	30.2	
Housing	threaded type	
Mounting	non-flush mountable	
Dimensions [mm]	M12 x 1 / L = 70	
Thread designation	M12 x 1	
Materials	housing: stainless steel; sensing face: PBT; lock nuts: brass	
Displays / operating elements		
Display	switching status	4 x 90° LED, yellow
Accessories		
Accessories (supplied)	lock nuts: 2	
Remarks		
Pack quantity	1 pcs.	
Electrical connection - plug		
Connector: 1 x M12; Contacts: gold-plated		

IFM204

Inductive sensor

IFKC007-ASKG/M/US-104-DRS
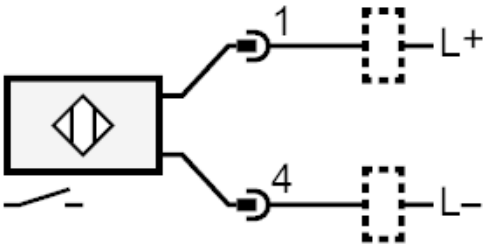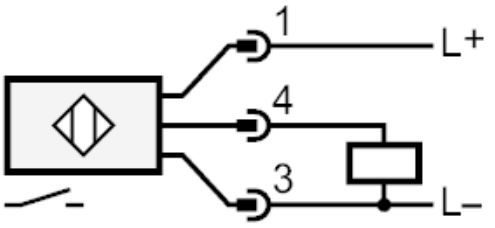
2-wire