Online data sheet



S32B-3011EA

S300 Mini Remote

SAFETY LASER SCANNERS

SICK
Sensor Intelligence.



Ordering information

Type	Part no.
S32B-3011EA	1056431

Usage

Other models and accessories → www.sick.com/S300_Mini_Remote

Detailed technical data

Features

Usage	Can only be used in the EFI system network, e.g., with a Flexi Soft safety controller and an additional S300 or S3000 safety laser scanner
Protective field range	3 m
Warning field range	8 m (at 15 % reflectivity)
Distance measuring range	30 m
Type of field set	Triple field sets
Number of field sets	16
Number of fields	48
Number of monitoring cases	32
Scanning angle	270°
Resolution (can be configured)	30 mm, 40 mm, 50 mm, 70 mm, 150 mm
Angular resolution	0.5°
Response time	80 ms [1)]
Protective field supplement	100 mm
Number of multiple samplings	2 ... 16, configurable
Delay of automatic reset	2 s ... 60 s, configurable

[1)] Depending on basic response time and multiple sampling.

Safety-related parameters

Type	Type 3 (IEC 61496)
Safety integrity level	SIL2 (IEC 61508) SILCL2 (EN 62061)
Category	Category 3 (EN ISO 13849)
Performance level	PL d (EN ISO 13849)
PFH_D (mean probability of a dangerous failure per hour)	8.0×10^{-8} (EN ISO 13849)

T_M (mission time)	20 years (EN ISO 13849)

Functions

Multiple sampling	✓
Monitoring case switching	✓
Static protective field switching	✓
Dynamic protective field switching	✓
Contour as a reference	✓
Safe SICK device communication via EFI	✓

Interfaces

Connection type	Cable, 250 mm, with male connector M12, 7-pin
Inputs	
Static control inputs with EFI	5 [1]
Standby	1 [1]
Outputs	
	Depends on the configuration of the connected EFI device
Configuration method	PC with CDS (Configuration and Diagnostic Software)
Configuration and diagnostics interface	RS-232
Transmission rate	38.4 kBaud
Safe SICK device communication via EFI	
Transmission rate	≤ 500 kBaud
Length of cable	≤ 20 m [2]
Fieldbus, industrial network	
Integration via EFI gateways	CANopen, Ethernet, PROFIBUS DP, PROFIBUS PROFIsafe, PROFINET PROFIsafe [3]

[1] Can only be used in the EFI system network, e.g., with a Flexi Soft safety controller and an additional S300 or S3000 safety laser scanner.
[2] Use only pre-assembled extension cables.
[3] For a suitable EFI-gateway see modules and gateways in the accessory section of connection systems.

Electrical data

Protection class	III (EN 50178, EN 60950)
Supply voltage V_s	24 V DC (16.8 V DC ... 30 V DC)
Power consumption	≤ 0.22 A [1] ≤ 0.24 A [2]

[1] At 24 V DC without output load.
[2] At 24 V DC including maximum output load.

Mechanical data

Dimensions (W x H x D)	102 mm x 116 mm x 105 mm
Weight	0.8 kg, without connecting cables
Housing material	Aluminum die cast
Housing color	RAL 1021 (yellow), RAL 9005 (black)
Optics cover material	Polycarbonate
Optics cover surface finish	Outside with scratch-resistant coating

Ambient data

Enclosure rating	IP65 (EN 60529)
Ambient operating temperature	–10 °C ... +50 °C
Storage temperature	–25 °C ... +50 °C
Vibration resistance	5 g, 10 Hz ... 150 Hz (IEC 61496, IEC 61496-3)
Shock resistance	
Continuous shock	10 g, 16 ms (IEC 61496, IEC 61496-3)

Other information

Type of light	Pulsed laser diode
Wave length	905 nm
Detectable remission	1.8 % ... > 1,000 %, reflectors
Laser class	1 (21 CFR 1040.10 and 1040.11, IEC 60825-1)

Classifications

ECl@ss 5.0	27272705
ECl@ss 5.1.4	27272705
ECl@ss 6.0	27272705
ECl@ss 6.2	27272705
ECl@ss 7.0	27272705
ECl@ss 8.0	27272705
ECl@ss 8.1	27272705
ECl@ss 9.0	27272705
ETIM 5.0	EC002550
ETIM 6.0	EC002550
UNSPSC 16.0901	39121528

Dimensional drawing (Dimensions in mm (inch))

Laser scanner

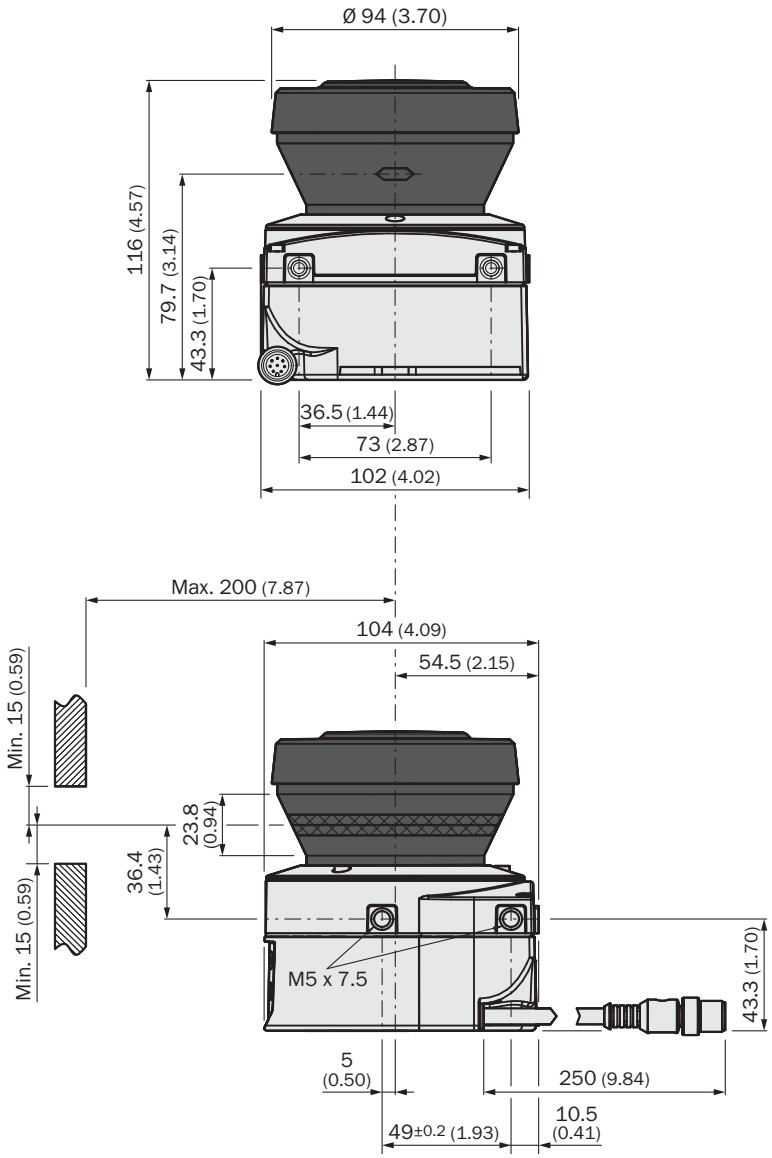

Connection diagram

S300 Mini Remote: Protective field switch with the help of a Flexi Soft safety controller

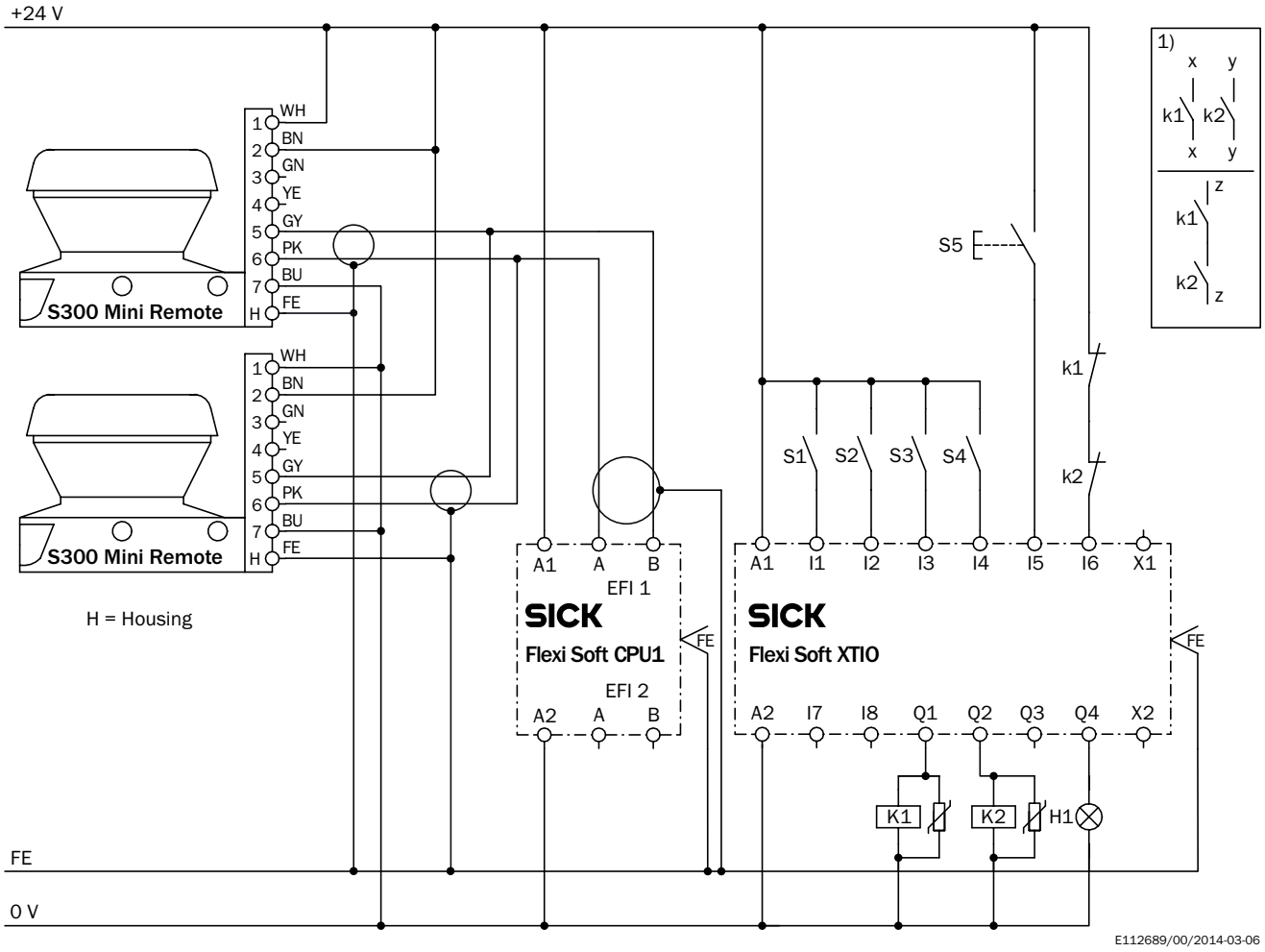

Two S300 Mini Remote
Protective field evaluation and switching via EFI using a Flexi Soft safety controller

Comments

[1] Output circuits: These contacts are to be connected to the controller such that, with the output circuit open, the dangerous state is disabled. For categories 4 and 3, this integration must be dual-channel (x/y paths). Single-channel insertion in the control (z path) is only possible with a single-channel control and by taking the risk analysis into account.

Protective field switching between an S3000 Expert and an S300 Mini Remote with static and dynamic inputs

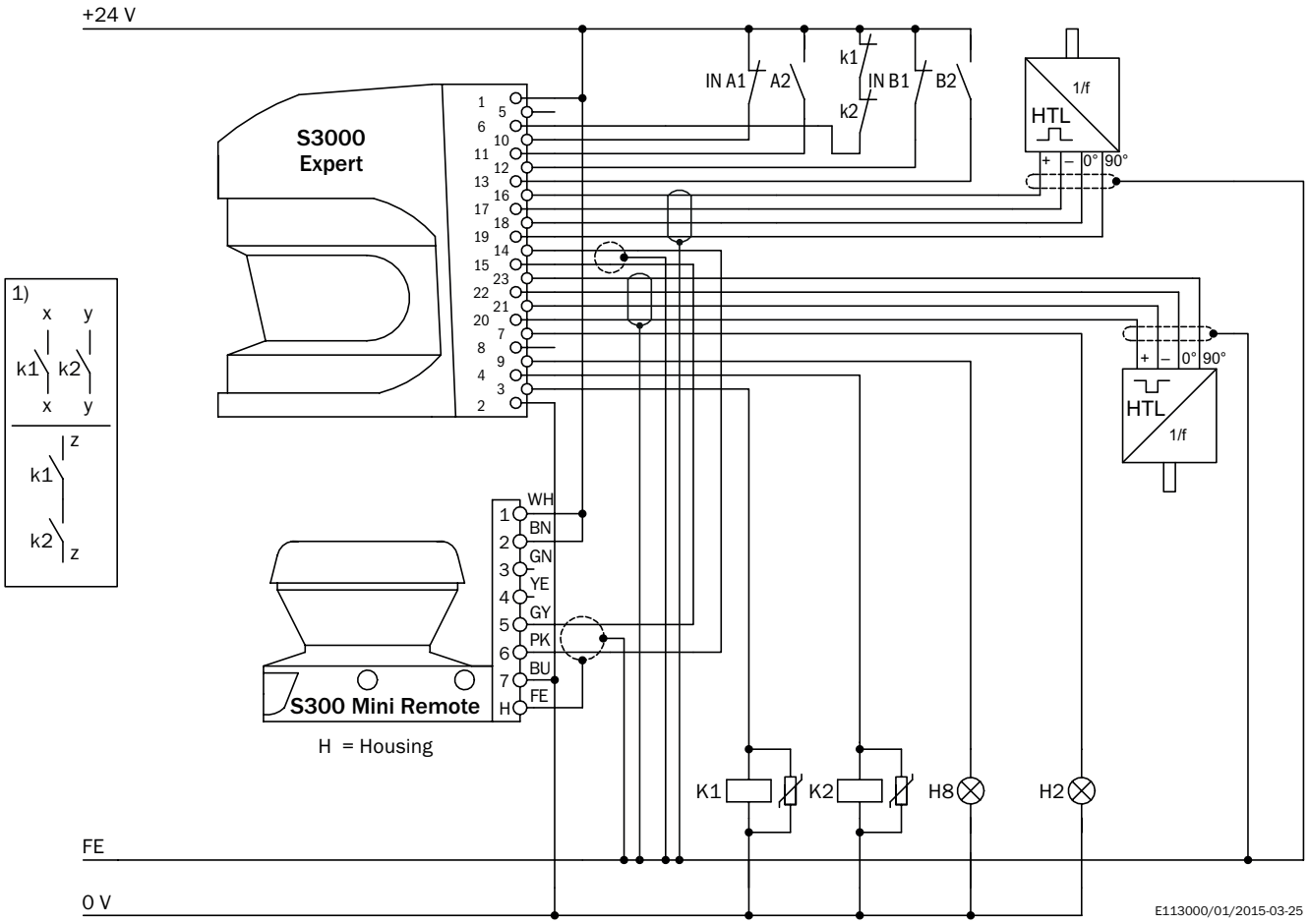

S3000 Expert with S300 Mini Remote in an EFI system with relays/contactors
Operating mode: without restart interlock with external device monitoring
Direction of travel-dependent dynamic protective field switching using the incremental encoders C and D as well as static protective field switching using the control inputs A and B of the S3000. The protective fields affect the OSSDs on the S3000 Expert.

Comments

[1] Output circuits: These contacts are to be connected to the controller such that, with the output circuit open, the dangerous state is disabled. For categories 4 and 3, this integration must be dual-channel (x/y paths). Single-channel insertion in the control (z path) is only possible with a single-channel control and by taking the risk analysis into account.

Protective field switching between an S3000 Expert and an S300 Mini Remote with static inputs

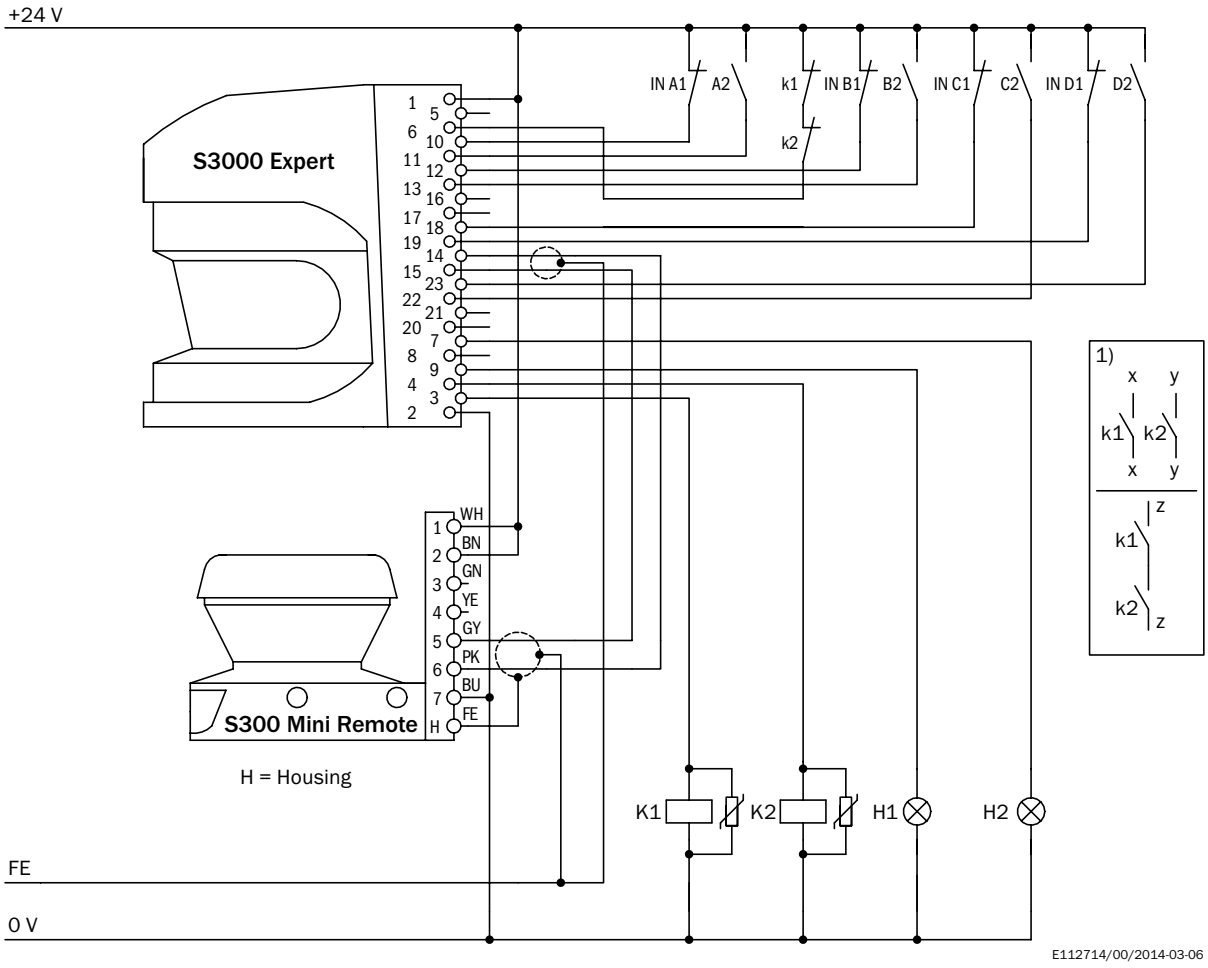

S3000 Expert with S300 Mini Remote in an EFI system with relays/contactors
Operating mode: without restart interlock, with external device monitoring
Static protective field switching by the S3000 control inputs IN A to D. The protective fields affect the OSSDs on the S3000 Expert.

Comments

[1] Output circuits: These contacts are to be connected to the controller such that, with the output circuit open, the dangerous state is disabled. For categories 4 and 3, this integration must be dual-channel (x/y paths). Single-channel insertion in the control (z path) is only possible with a single-channel control and by taking the risk analysis into account.

Recommended accessories

Other models and accessories ➜ www.sick.com/S300_Mini_Remote

	Brief description	Type	Part no.
Mounting brackets and plates			
	1 piece, mounting bracket for rear mounting on wall or machine	Mounting kit 1a	2034324
	1 piece, mounting bracket for rear mounting on wall or machine with protection of optics hood	Mounting kit 1b	2034325

	Brief description	Type	Part no.
	1 piece, mounting bracket, adjustable lateral axis, only in conjunction with mounting kit 1a (2034324) or 1b (2034325)	Mounting kit 2	2039302
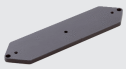	1 piece, mounting plate, adjustable longitudinal axis, only in conjunction with mounting kit 2 (2039302)	Mounting kit 3	2039303
Plug connectors and cables			
	Head A: female connector, M12, 7-pin, straight, SICK-coded Head B: Flying leads Cable: shielded, 10 m Extension cable S300 Mini Remote	DOL-1SS2G10ME15KM3	6042340
	Head A: female connector, M12, 7-pin, straight, SICK-coded Head B: Flying leads Cable: shielded, 15 m Extension cable S300 Mini Remote	DOL-1SS2G15ME15KM3	6042341
	Head A: female connector, M12, 7-pin, straight, SICK-coded Head B: Flying leads Cable: shielded, 20 m Extension cable S300 Mini Remote	DOL-1SS2G20ME15KM3	6042342
	Head A: female connector, M12, 7-pin, straight, SICK-coded Head B: Flying leads Cable: shielded, 2.5 m Extension cable S300 Mini Remote	DOL-1SS2G2M5E15KM3	6042337
	Head A: female connector, M12, 7-pin, straight, SICK-coded Head B: Flying leads Cable: shielded, 5 m Extension cable S300 Mini Remote	DOL-1SS2G5M0E15KM3	6042338
	Head A: female connector, M12, 7-pin, straight, SICK-coded Head B: Flying leads Cable: shielded, 7.5 m Extension cable S300 Mini Remote	DOL-1SS2G7M5E15KM3	6042339
	Head A: male connector, M8, 4-pin, straight Head B: male connector, USB-A, straight Cable: PVC, unshielded, 2 m	DSL-8U04G02M025KM1	6034574
	Head A: male connector, M8, 4-pin, straight Head B: male connector, USB-A, straight Cable: PVC, unshielded, 10 m	DSL-8U04G10M025KM1	6034575

SICK AT A GLANCE

SICK is one of the leading manufacturers of intelligent sensors and sensor solutions for industrial applications. A unique range of products and services creates the perfect basis for controlling processes securely and efficiently, protecting individuals from accidents and preventing damage to the environment.

We have extensive experience in a wide range of industries and understand their processes and requirements. With intelligent sensors, we can deliver exactly what our customers need. In application centers in Europe, Asia and North America, system solutions are tested and optimized in accordance with customer specifications. All this makes us a reliable supplier and development partner.

Comprehensive services complete our offering: SICK LifeTime Services provide support throughout the machine life cycle and ensure safety and productivity.

For us, that is “Sensor Intelligence.”

WORLDWIDE PRESENCE:

Contacts and other locations –www.sick.com