Honeywell

krom schröder

Relief valves VSBV 25

Technical Information · GB
2 Edition 01.18



- For gaseous media
- Inlet pressure range up to 4 bar
- Adjustable opening pressure 20 – 500 mbar

Contents

Relief valves VSBV 25 1
Contents 2
1 Application 3
1.1 Application examples 4
2 Certification 5
2.1 VSBV 25R 5
3 Function 6
4 Selection 7
4.1 Type code 7
5 Project planning information 8
5.1 Installation 8
6 Accessories 9
6.1 Exhaust ABG 9
6.1.1 Installation instructions 9
6.1.2 Selection 10
6.1.3 Technical data 11
7 Technical data 12
7.1 Dimensions 13
7.2 Data and spring table 13
8 Maintenance cycles 14
Feedback 15
Contact 15



= To be continued

1 Application



VSBV 25R40

Relief valve for relieving brief pressure surges in control systems thus preventing the safety shut-off valve JSAV from being activated unintentionally. The VSBV reduces too high a pressure increase due to gas creeps which are the result of gas pressure regulators that are not tight closing.

Compulsory for all gas pressure control systems in conjunction with a safety shut-off valve JSAV pursuant to EN 746-2.

1.1 Application examples

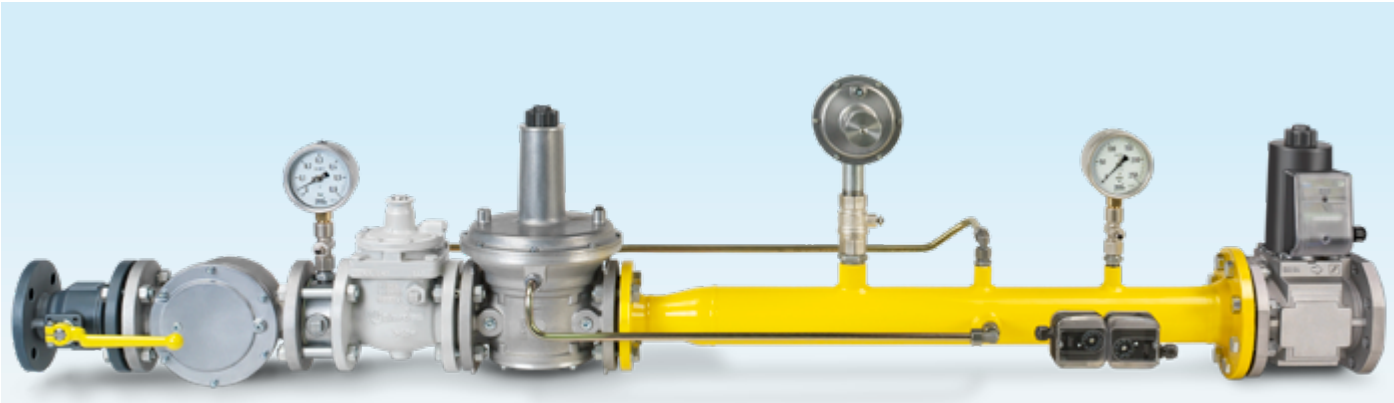

Gas inlet section

2 Certification

Certificates – see Docuthek.

2.1 VSBV 25R

EU certified pursuant to



Regulation:

– Gas Appliances Regulation (EU) 2016/426,

Standard:

– DIN 33821.

Eurasian Customs Union



The product VSBV 25 meets the technical specifications of the Eurasian Customs Union.

3 Function

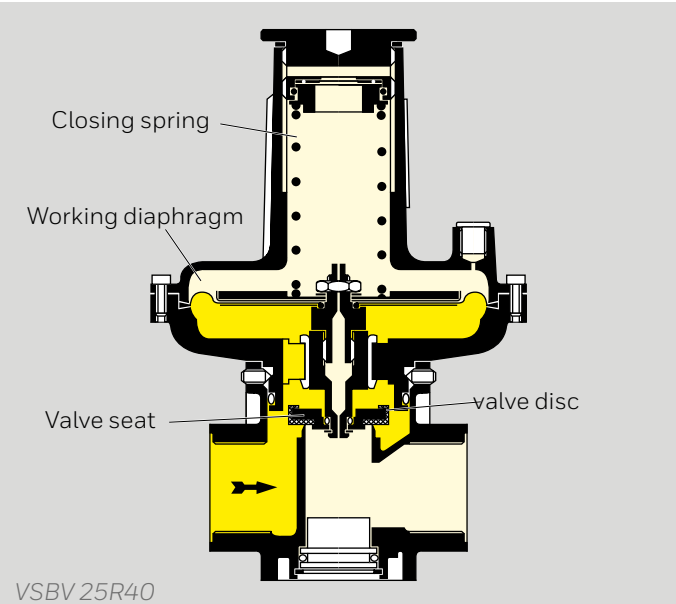

VSBV 25R40

Relief valve VSBV is closed by a spring when no pressure is applied.

The gas flows through the inlet area to the space beneath the working diaphragm. If the inlet pressure reaches the pressure set by the closing spring, the diaphragm raises the valve disc from the valve seat. The relief valve opens and the gas can flow to the outlet.

If the inlet pressure has decreased due to the gas flowing out, the valve closes.

A test nipple has been installed to measure the inlet pressure p_u.

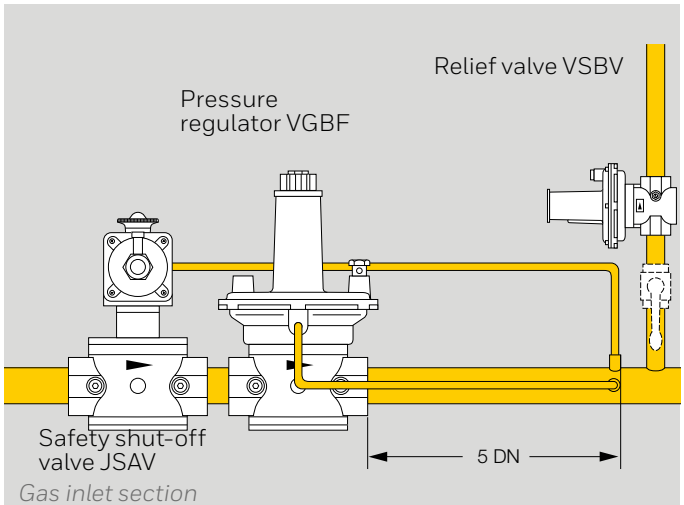

Gas inlet section

Relief valve VSBV relieves pressure peaks thus preventing the safety shut-off valve JSAV from being activated unintentionally.

4 Selection

Type	R	TN	40	-4	-0
VSBV 25	●		●	●	
VSBV 25		●	●		●

● = *standard*, ○ = *available*

Order example
VSBV 25R40-4

4.1 Type code

Code	Description
VSBV	Relief valve
25	Nominal size
R TN	Rp internal thread NPT internal thread
40	$p_{u\,max.}$ 4 bar
-4 -0	With pressure test point at the inlet No pressure test point at the inlet

5 Project planning information

5.1 Installation

Installation position: for opening pressures up to 100 mbar, spring dome pointing vertically upwards or to the side, not upside down; for other opening pressures, any installation position is possible. If the spring dome is pointing to the side, the set opening pressure is reduced by 4 mbar; if the spring dome is pointing downwards, it is reduced by 8 mbar.

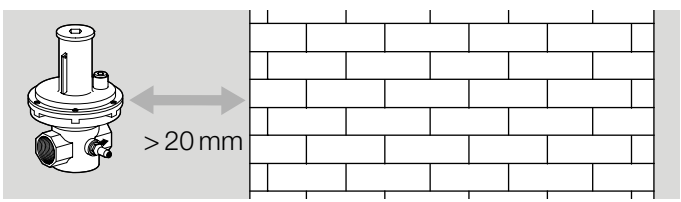

The relief valve VSBV must not be in contact with masonry. Minimum clearance 20 mm.

Do not store or install the unit in the open air.

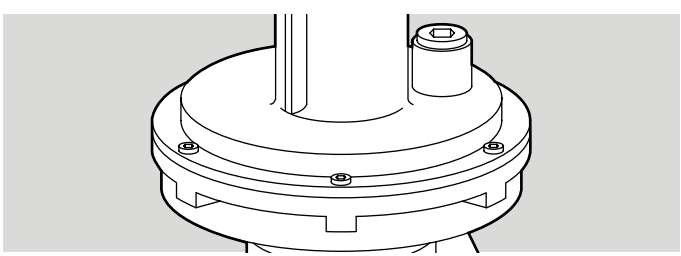

The unit is delivered with a test nipple fitted to the side to measure the inlet pressure p_u.

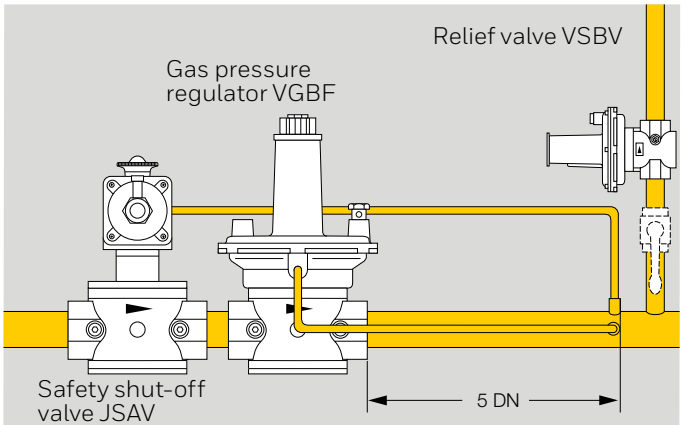

If the controls downstream of a gas pressure regulator are not resistant to the supply pressure, EN 746-2 prescribes a safety shut-off valve upstream and a relief valve downstream of the gas pressure regulator – regardless of how high the inlet pressure is.

6 Accessories

6.1 Exhaust ABG

Potentially explosive areas may be created at the discharge points of relief lines. The exhaust ABG enables the vertical, upwards exhaustion of the gases over the roof edges into the atmosphere. The exhaust ABG may be connected to relief valves or manifold lines. It is suitable for pressures on the exhaust outlet of up to 1.5 bar (21.75 psig). The exhaust's outlet openings are fitted with anti-bird grilles.

It is the responsibility of the operator to determine the explosion-hazard areas and to specify and document these zones. Instructions for this can be found in the DVGW note G442, the rules and regulations issued by employer's liability insurance associations, the German Technical Rules for Industrial Safety and Health (TRBS), as well as further relevant publications.

6.1.1 Installation instructions

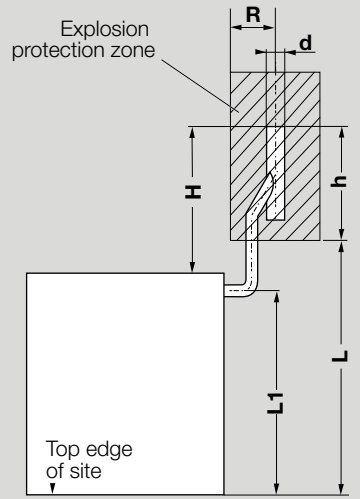

Legend

- **h** = Explosion protection zone underneath the exhaust
- **L1** = Distance between site and outlet opening of relief/manifold line
- **L** = Distance between site and explosion protection zone
- **H** = Distance between roof edge and exhaust outlet
- **d** = Exhaust diameter
- **R** = Radius of the explosion protection zone

Install the exhaust ABG so as to guarantee the free flow and jet spreading of the outflowing gas. The exhaust should clearly project out over the roof edge (**H** = 15 × **d**). The outlet openings of the relief or manifold lines should lie ≥ 1.8 m (6 ft) over the top edge of the site (**L1**). The connection pipe for the exhaust ABG can be shortened, where applicable. Here it should be noted that the explosion protection zone underneath the exhaust remains big enough (**h** = 10 × **d**) and the distance between the explosion protection zone and the site is ≥ 2 m (6.6 ft) (**L**).

6.1.2 Selection

Type	/40	/80
ABG 25	●	–
ABG 50	–	●

Bestellbeispiel
ABG 25/40

Type code

Code	Description
ABG	Exhaust for gas pressure control and measuring systems
	Connection pipe nominal diameter [DN]:
25	25
50	50
	Exhaust nominal diameter [DN]:
/40	40
/80	80

Exhaust ABG 25/40, Order No. 03165011,
Exhaust ABG 50/80, Order No. 03165013.

6.1.3 Technical data

Version: steel welded, hot-galvanized.

Connection pipe length: 1100 mm (43.3 inches).

Dimensions

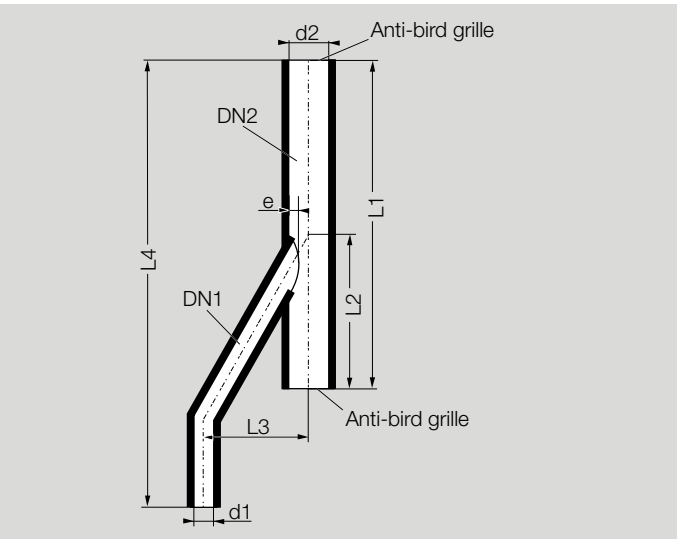

Type	Nominal size DN		Dimensions in mm (inches)					Dimensions in mm (inches)			
								DN 1		DN 2	
	DN 1	DN 2	L1	L2	L3	L4	e	d1	Wall thickness	d2	Wall thickness
ABG 25/40	25	40	350 (13.8)	160 (6.3)	130 (5.12)	1100 (43.3)	4.0 (0.16)	33.7 (1.33)	2.6 (0.1)	48.3 (1.9)	2.6 (0.1)
ABG 50/80	50	80	560 (22.05)	250 (9.84)	200 (7.87)	1100 (43.3)	8.0 (0.31)	60.3 (2.37)	2.9 (0.11)	88.9 (3.5)	3.2 (0.13)

7 Technical data

Gas types: natural gas, town gas, landfill gas, LPG (gaseous) and biogas (max. 0.02 %-by-vol. H_2S). The gas must be dry in all temperature conditions and must not contain condensate.

Inlet pressure p_u: up to 4 bar.

Accuracy group: AG 10.

Ambient temperature: -15 to +60°C.

Storage temperature: -15 to +40 °C.

Valve housing: aluminium,
valve seat and stem: aluminium,
diaphragm: Perbunan,
valve disc: NBR.

Internal thread: Rp 1 to ISO 7-1.

Weight: 1.6 kg.

7.1 Dimensions

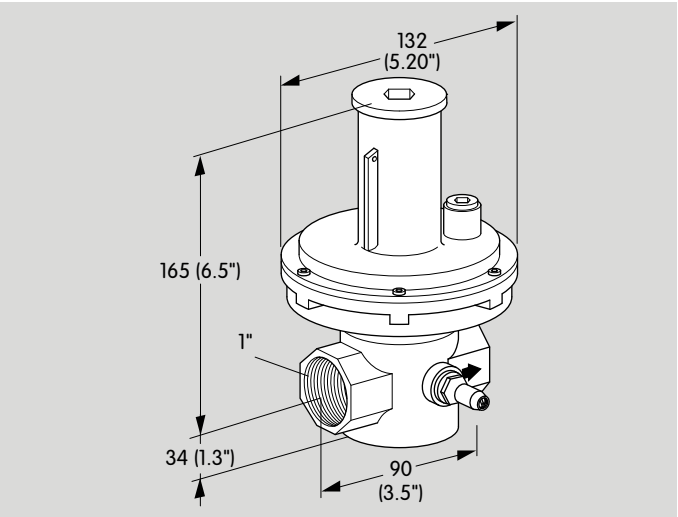

7.2 Data and spring table

Type	Opening pressure range [mbar]	Spring marking	Order No.
VSBV 25R40-4	20 – 40	red	75441805
	35 – 50	yellow	75441806
	45 – 75	green	75441807
	70 – 170*	blue	75441808
	165 – 330	black	75441809
	320 – 500	white	75441810

** Standard equipment*