Technical catalogue

X1 by Emax

Low voltage air circuit-breakers

1SDC200009D0203 - 2008 edition

ABB

X1 by Emax

Summary

New X1 by Emax.
The great little air circuit-

-breaker.

The X1 circuit-breaker by Emax comes from more than 60 years' experience of ABB SACE, a world leader in constructing moulded-case and air circuit-breakers. Our know-how, appreciated and recognised world-wide, has allowed us to obtain results which will amaze you. X1 by Emax is really small, powerful and safe. In fact, the search for extremely compact dimensions has not in any way affected the reliability and safety standards, because what counts most of all at ABB is the excellence of quality of our products.

The new X1 by Emax is revolutionary from all points of view. For example, the new rapid accessory fitting system: no wires inside the circuit-breaker, rapid and safe connection to the external circuit, and no screws for connection to the external power supply.

New X1 by Emax.
Small and powerful.

The performance of an air circuit-breaker with extremely compact dimensions. X1 by Emax is the best solution for all those applications where dimensions are an important and determining factor in selecting the circuit-breaker, but without necessarily having to give up high rated current, breaking capacity or short-time withstand current values.

Its performances are really astonishing when put in relation to its dimensions. Rated current Iu up to 1600 A, high Icw for selective circuit-breakers and, for the current-limiting version, an incredible Icu of 150kA at 415V AC. Performances proven by reliability, safety and ABB SACE's high quality standards.


ABB
SACE X1
268 mm
210 mm
125 mm

New X1 by Emax.
Small is better.

The decidedly compact dimensions offer enormous benefits in terms of easier installation and wiring cabling – the space for curving the wires cables or for busbar passage definitely becomes greater. Furthermore, the smaller dimensions allow optimisation of installations, making them decidedly slimmer, also thanks to new and extremely effective installation solutions.

For the first time, an air circuit-breaker can be installed on a back plate and in a horizontal position, both in the fixed and withdrawable version. Moreover, with the new racking-in system of the moving part, its operation becomes even safer because it prevents accidental or unwarranted and potentially hazardous operations.


ABB
SACE X1
ABB
SACE X1

New X1 by Emax.
Small and intelligent.

X1 by Emax has three brand-new latest generation electronic trip units available: PR331/P, PR332/P and PR333/P, which are definitely to the fore in the present panorama of protection trip units for low voltage circuit-breakers. The basic version, PR331/P, is fitted with dip-switches for setting the protection thresholds and, for each protection function, has a LED for signalling that the protection has tripped. On the other hand, PR332/P and PR333/P are fitted with a large graphic display which allows all the information needed (settings of the protection functions, alarms and electrical values) to be displayed simply and clearly. Apart from the "classic" protection functions, all three trip units offer advanced functions, such as the exclusive Data Logger function, which allows all the events and values prior to a fault to be recorded for subsequent analysis.

X1 by Emax


SACE PR332/P
COM
Power
TX
RX
In=1600A
ABB
MEASURING
ESC
SACE X1

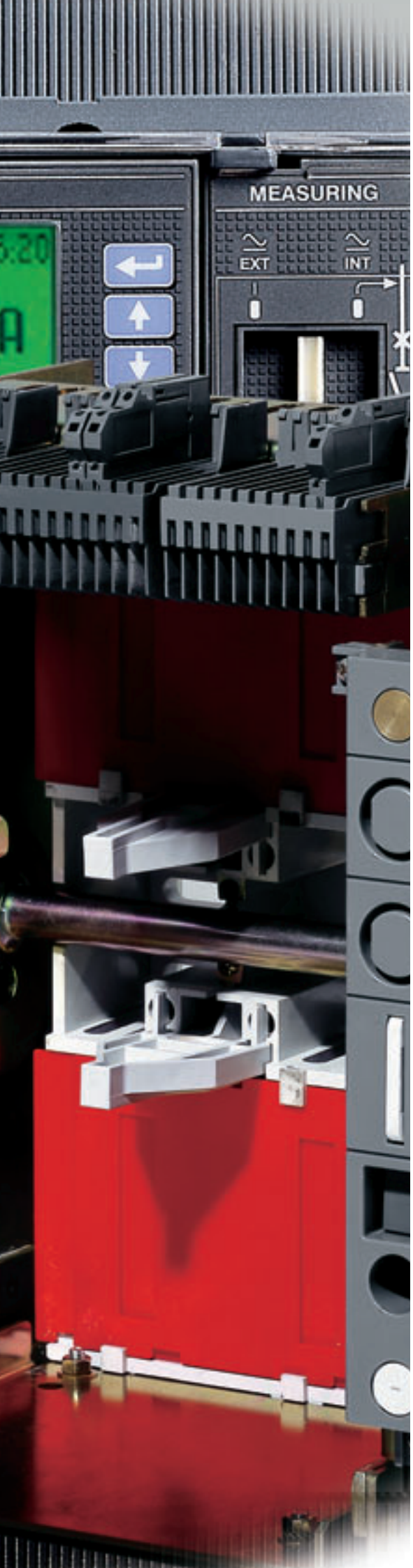

Main characteristics and ranges

1

Contents

Overview of the Emax family

Fields of application

1

			X1			E1		E2			
Automatic circuit-breakers			**X1B**	**X1N**	**X1L**	**E1B**	**E1N**	**E2B**	**E2N**	**E2S**	**E2L**
Poles		[No.]		3-4		3 - 4			3 - 4		
4p CB neutral current-carrying capacity		[% Iu]		100		100			100		
Iu	(40 °C)	[A]	630-800-1000-1250-1600	630-800-1000-1250-1600	630-800-1000-1250-	800-1000-1250-1600	800-1000-1250-1600	1600-2000	1000-1250-1600-2000	800-1000-1250-1600-2000	1250-1600
Ue		[V~]	690	690	690	690	690	690	690	690	690
Icu	(220...415V)	[kA]	42	65	150	42	50	42	65	85	130
Ics	(220...415V)	[kA]	42	50	150	42	50	42	65	85	130
Icw	(1s)	[kA]	42	42	15	42	50	42	55	65	10
	(3s)	[kA]				36	36	42	42	42	–
Automatic circuit-breakers with full-size neutral conductor											
Poles		[No.]		Standard version		Standard version			Standard version		
4p CB neutral current-carrying capacity		[% Iu]									
Iu	(40 °C)	[A]									
Ue		[V~]									
Icu	(220...415V)	[kA]									
Ics	(220...415V)	[kA]									
Icw	(1s)	[kA]									
	(3s)	[kA]									
Switch-disconnectors			**X1B/MS**			**E1B/MS**	**E1N/MS**	**E2B/MS**	**E2N/MS**	**E2S/MS**	
Poles		[No.]	3-4			3 - 4	3 - 4	3 - 4	3 - 4	3 - 4	
Iu	(40 °C)	[A]	1000-1250 1600			800-1000-1250-1600	800-1000-1250-1600	1600-2000	1000-1250-1600-2000	1000-1250-1600-2000	
Ue		[V~]	690			690	690	690	690	690	
Icw	(1s)	[kA]	42			42	50	42	55	65	
	(3s)	[kA]				36	36	42	42	42	
Icm	(220...440V)	[kA]	88.2			88,2	105	88,2	121	143	
Automatic circuit-breakers for applications up to 1150 V AC *			**X1B/E**					**E2B/E**	**E2N/E**		
Poles		[No.]	3-4					3 - 4	3 - 4		
Iu	(40 °C)	[A]	630-800-1000-1250-1600					1600-2000	1250-1600-2000		
Ue		[V~]	1000					1150	1150		
Icu	(1150V)	[kA]	20					20	30		
Ics	(1150V)	[kA]	20					20	30		
Icw	(1s)	[kA]	20					20	30		
Switch-disconnectors for applications up to 1150 V AC *			**X1B/E MS**					**E2B/E MS**	**E2N/E MS**		
Poles		[No.]	3-4					3 - 4	3 - 4		
Iu	(40 °C)	[A]	1000-1250-1600					1600-2000	1250-1600-2000		
Ue		[V~]	1000					1150	1150		
Icw	(1s)	[kA]	20					20	30		
Icm	(1000V)	[kA]	40					40	63		
Switch-disconnectors for applications up to 1000 V DC						**E1B/E MS**			**E2N/E MS**		
Poles		[No.]				3 - 4			3 - 4		
Iu	(40 °C)	[A]				800-1250			1250-1600-2000		
Ue		[V-]				750 (3p)-1000(4p)			750 (3p)-1000(4p)		
Icw	(1s)	[kA]				20			25		
Icm	(750V)	[kA]				42			52,5		
	(1000V)	[kA]				42			52,5		
Sectionalizing truck						**E1 CS**			**E2 CS**		
Iu	(40 °C)	[A]				1250			2000		
Earthing switch with making capacity						**E1 MTP**			**E2 MTP**		
Iu	(40 °C)	[A]				1250			2000		
Earthing truck						**E1 MT**			**E2 MT**		
Iu	(40 °C)	[A]				1250			2000		

(*) 1000V for Emax X1.

	E3					E4			E6	
	E3N	**E3S**	**E3H**	**E3V**	**E3L**	**E4S**	**E4H**	**E4V**	**E6H**	**E6V**
			3 - 4				3 - 4		3 - 4	
			100				50		50	
	2500-3200	1000-1250-1600-2000-2500-3200	800-1000-1250-1600-2000-2500-3200	800-1250-1600-2000-2500-3200	2000-2500	4000	3200-4000	3200-4000	4000-5000-6300	3200-4000-5000-6300
	690	690	690	690	690	690	690	690	690	690
	65	75	100	130	130	75	100	150	100	150
	65	75	85	100	130	75	100	150	100	125
	65	75	75	85	15	75	100	100	100	100
	65	65	65	65	–	75	75	75	85	85

						E4S/f	**E4H/f**		**E6H/f**	
			Standard version			4	4		4	
						100	100		100	
						4000	3200-4000		4000-5000-6300	
						690	690		690	
						80	100		100	
						80	100		100	
						80	85		100	
						75	75		100	
	E3N/MS	**E3S/MS**		**E3V/MS**		**E4S/MS**	**E4H/MS**	**E4H/f MS**	**E6H/MS**	**E6H/f MS**
	3 - 4	3 - 4		3-4		3 - 4	3 - 4	4	3-4	4
	2500-3200	1000-1250-1600-2000-2500-3200		800-1250-1600-2000-2500-3200		4000	3200-4000	3200-4000	4000-5000-6300	4000-5000-6300
	690	690		690		690	690	690	690	690
	65	75		85		75	100	85	100	100
	65	65		65		75	75	75	85	85
	143	165		286		165	220	220	220	220

			E3H/E				**E4H/E**		**E6H/E**	
			3 - 4				3 - 4		3 - 4	
			1250-1600-2000-2500-3200				3200-4000		4000-5000 6300	
			1150				1150		1150	
			30 (*)				65		65	
			30 (*)				65		65	
			30 (*)				65		65	
			E3H/E MS				**E4H/E MS**		**E6H/E MS**	
			3 - 4				3 - 4		3 - 4	
			1250-1600-2000-2500-3200				3200-4000		4000-5000 6300	
			1150				1150		1150	
			50				65		65	
			105				143		143	
			E3H/E MS				**E4H/E MS**		**E6H/E MS**	
			3 - 4				3 - 4		3 - 4	
			1250-1600-2000-2500-3200				3200-4000		4000-5000-6300	
			750 (3p)-1000(4p)				750 (3p) - 1000 (4p)		750 (3p) - 1000 (4p)	
			40				65		65	
			105				143		143	
			105				143		143	
			E3 CS				**E4 CS**		**E6 CS**	
			3200				4000		6300	
			E3 MTP				**E4 MTP**		**E6 MTP**	
			3200				4000		6300	
			E3 MT				**E4 MT**		**E6 MT**	
			3200				4000		6300	

Emax X1 air circuit-breakers

The Ranges

1

Common data		
Voltages		
Rated service voltage **Ue**	[V]	690 ~
Rated insulation voltage **Ui**	[V]	1000
Rated impulse withstand voltage **Uimp**	[kV]	12
Operating temperature	[°C]	-25....+70
Storage temperature	[°C]	-40....+70
Frequency f	[Hz]	50 - 60
Number of poles		3 - 4
Versions		Fixed - Withdrawable

Emax X1 automatic circuit-breakers		**X1**		
Performance levels		B	N	L
Currents: rated uninterrupted current (at 40 °C) Iu	[A]	**630**	**630**	**630**
	[A]	**800**	**800**	**800**
	[A]	**1000**	**1000**	**1000**
	[A]	**1250**	**1250**	**1250**
	[A]	**1600**	**1600**	
	[A]			
Neutral pole current-carrying capacity for 4-pole CBs	[%Iu]	100	100	100
Rated ultimate breaking capacity under short-circuit **Icu**				
220/230/380/400/415 V ~	[kA]	42	65	150
440 V ~	[kA]	42	65	130
500/525 V ~	[kA]	42	50	100
660/690 V ~	[kA]	42	50	60
Rated service breaking capacity under short-circuit **Ics**				
220/230/380/400/415 V ~	[kA]	42	50	150
440 V ~	[kA]	42	50	130
500/525 V ~	[kA]	42	42	100
660/690 V ~	[kA]	42	42	45
Rated short-time withstand current **Icw** (1s)	[kA]	42	42	15
Rated making capacity under short-circuit (peak value) **Icm**				
220/230/380/400/415 V ~	[kA]	88.2	143	330
440 V ~	[kA]	88.2	143	286
500/525 V ~	[kA]	88.2	105	220
660/690 V ~	[kA]	88.2	105	132
Utilisation category (according to CEI EN 60947-2)		B	B	A
Isolation behaviour (according to CEI EN 60947-2)		■	■	■
Overcurrent protection				
Electronic trip units for AC applications		■	■	■
Operating times				
Closing time (max)	[ms]	80	80	80
Breaking time for I<Icw (max) (1)	[ms]	70	70	70
Breaking time for I>Icw (max)	[ms]	30	30	12
Overall dimensions				
Fixed: H = 268 mm - D = 181 mm - W (3/4 poles)	[mm]		210/280	
Withdrawable: H = 343 mm - D = 254 mm - W (3/4 poles)	[mm]		284/354	
Weights (circuit-breaker complete with releases and CS, excluding accessories)				
Fixed 3/4 poles	[kg]		11/14	
Withdrawable 3/4 poles (including fixed part)	[kg]		32/42.6	

(1) Without intentional delays.

			X1		
Rated uninterrupted current (at 40 °C) Iu		[A]	630-800	1000-1250	1600
Mechanical life with regular ordinary maintenance		[No. operations x 1000]	12,5	12,5	12,5
Operation frequency		[Operations/hour]	60	60	60
Electrical life	(440 V ~)	[No. operations x 1000]	6	4	3
	(690 V ~)	[No. operations x 1000]	3	2	1
Operation frequency		[Operations/hour]	30	30	30

Emax X1 switch-disconnectors

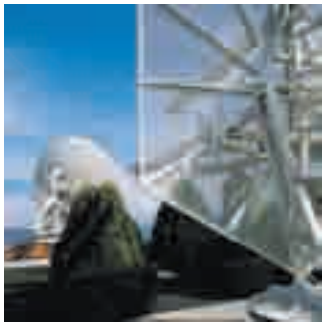

1SDC200058F0001

The Emax X1 switch-disconnectors are derived from the corresponding circuit-breakers, of which they maintain the overall dimensions and the possibility of mounting accessories.
This version only differs from the circuit-breakers in the absence of overcurrent releases. The circuit-breaker is available in both fixed and withdrawable, three-pole and four-pole versions. The switch-disconnectors, identified by the letters "/MS", can be used according to category of use AC-23A (switching motor loads or other highly inductive loads) in accordance with the IEC 60947-3 Standard.
The electrical specifications of the switch-disconnectors are listed in the table below.

			X1B/MS
Rated uninterrupted current (at 40 °C) Iu		[A]	**1000 - 1250 - 1600**
Rated service voltage **Ue**		[V ~]	690
		[V –]	250
Rated insulation voltage **Ui**		[V ~]	1000
Rated impulse withstand voltage **Uimp**		[kV]	12
Rated short-time withstand current **Icw**	(1s)	[kA]	42
Rated making capacity under short-circuit (peak value) **Icm**			
220/230/380/400/415/440 V ~		[kA]	88.2
500/660/690 V ~		[kA]	88.2

Note: the breaking capacity Icu, by means of external protection relay, with 500ms maximum timing, is equal to the value of Icw (1s).

Emax X1 automatic circuit-breakers for applications up to 1000V AC

1SDC200060F0001

Emax X1B can be supplied in a special version for rated service voltages up to 1000 V in AC. Circuit-breaker in this version is identified by the letter of the standard range (rated service voltage up to 690 V AC) plus "/E", and is derived from the corresponding standard Emax X1B. It offers the same versions and accessories as the latter. The Emax X1B can be either fixed and withdrawable, in both three-pole and four-pole versions. Emax X1/E circuit-breaker is especially suitable for installation in mines, oil and chemical plants, and for traction.
The table below shows the electrical specifications of the range.

			X1B/E
Rated uninterrupted current (at 40 °C) Iu		[A]	**630 - 800 - 1000 - 1250 - 1600**
Rated service voltage **Ue**		[V ~]	1000
Rated insulation voltage **Ui**		[V ~]	1000
Rated ultimate breaking capacity under short-circuit **Icu**	1000 V ~	[kA]	20
Rated service breaking capacity under short-circuit **Ics**	1000 V ~	[kA]	20
Rated short-time withstand current **Icw**	(1s)	[kA]	20

Emax X1 switch-disconnectors for applications up to 1000V AC

1SDC200061F0001

The switch-disconnectors of Emax X1 family complete the range of apparatus for applications at 1000V in alternating current (AC). It conforms with the IEC 60947-3 Standards.
Circuit-breaker in this version is identified by the letter of the standard range, where the rated service voltage is up to 690 V AC, plus "/E", thus becoming Emax X1B/E MS. It is derived from the corresponding standard switch-disconnector X1B/MS.
It is available in the three-pole and four-pole, fixed and withdrawable versions, with accessory options and installations as for the corresponding standard circuit-breaker.

			X1B/E MS
Rated uninterrupted current (at 40 °C) Iu		[A]	**1000 - 1250 - 1600**
Poles			3 - 4
Rated service voltage **Ue**		[V ~]	1000
Rated insulation voltage **Ui**		[V ~]	1000
Rated impulse withstand voltage **Uimp**		[kV]	12
Rated short-time withstand current **Icw**	(1s)	[kA]	20
Rated making capacity under short-circuit (peak value)		[kA]	40

Construction characteristics

Structure of the circuit-breaker

The structure of the Emax X1 air circuit-breaker is extremely compact, considerably reducing overall dimensions. Furthermore, another very important characteristic of X1 is the possibility of installing it both in vertical or lying down position. Thus, it's possible to reduce in a consistent manner the switchgear dimensions. For example, thanks to a very low width, the number of the circuit-breakers in the switchgear's column can be increased by making a lying installation.

Construction characteristics

Operating mechanism

The operating mechanism is of the stored energy type, operated using pre-charged springs.
The springs are charged manually by operating the front lever or using a geared motor, supplied on request.
The opening springs are charged automatically during the closing operation.
With the operating mechanism fitted with shunt closing and opening releases and the geared motor for charging the springs, the circuit-breaker can be operated by remote control and, if required, co-ordinated by a supervision and control system.

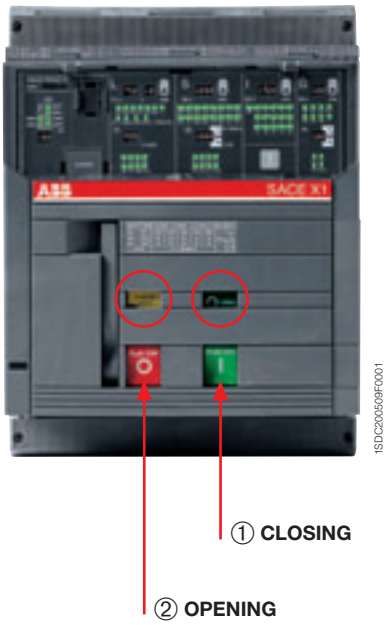

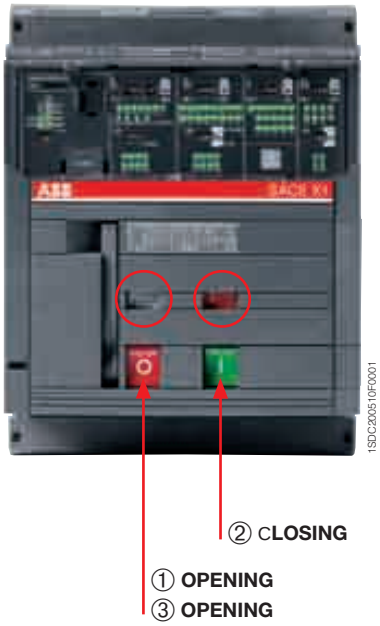

The following operating cycles are possible without recharging the springs:
- starting with the circuit-breaker open (0) and the springs charged:
  closing-opening
- starting with the circuit-breaker closed (I) and the springs charged:
  opening-closing-opening.

The operating mechanism is fitted with a mechanical and electrical anti-pumping device.

Construction characteristics

Operating and signalling parts

1

Fixed version

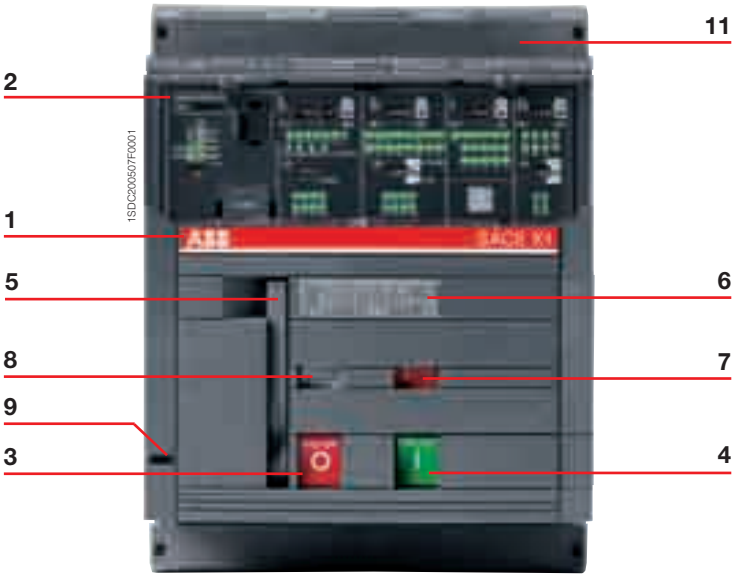

Withdrawable version

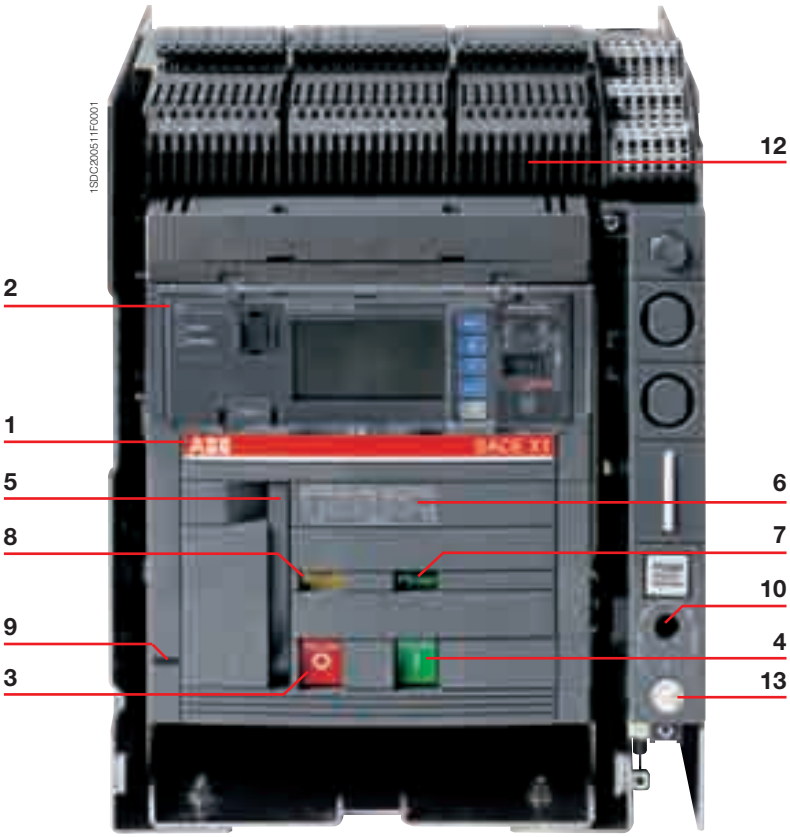

Caption

1	Trademark and size of circuit-breaker
2	PR331/P, PR332/P or PR333/P trip units
3	Pushbutton for manual opening
4	Pushbutton for manual closing
5	Lever to manually charge closing springs
6	Electrical rating plate
7	Mechanical device to signal circuit-breaker open “O” and closed “I”
8	Signal for springs charged or discharged
9	Mechanical signalling of overcurrent releases tripped (TRIP RESET)
10	Racking-in/out device (for withdrawable version only)
11	Terminal box (for fixed version only)
12	MP sliding contacts (for withdrawable version only)
13	Circuit-breaker position indicator: racked-in/ test isolated /racked-out / connected/test isolated/disconnected (for withdrawable version only)

Note:
“Racked-in” refers to the position in which both the power contacts and auxiliary contacts are connected; “racked-out” is the position in which both the power contacts and auxiliary contacts are disconnected; “test isolated” is the position in which the power contacts are disconnected, whereas the auxiliary contacts are connected.

Construction characteristics

Fixed parts of withdrawable circuit-breakers

The fixed parts of withdrawable circuit-breakers have shutters for segregating the fixed contacts when the circuit-breaker is withdrawn from the compartment. These can be locked in their closed position using padlock devices.

Caption

1	Sheet steel supporting structure
2	Safety shutters (protection rating IP20)
3	Terminal support base
4	Terminals (rear, front)
5	FP sliding contacts
6	Fastening points*

* To fix the fixed part on the back plate, use the four rear holes

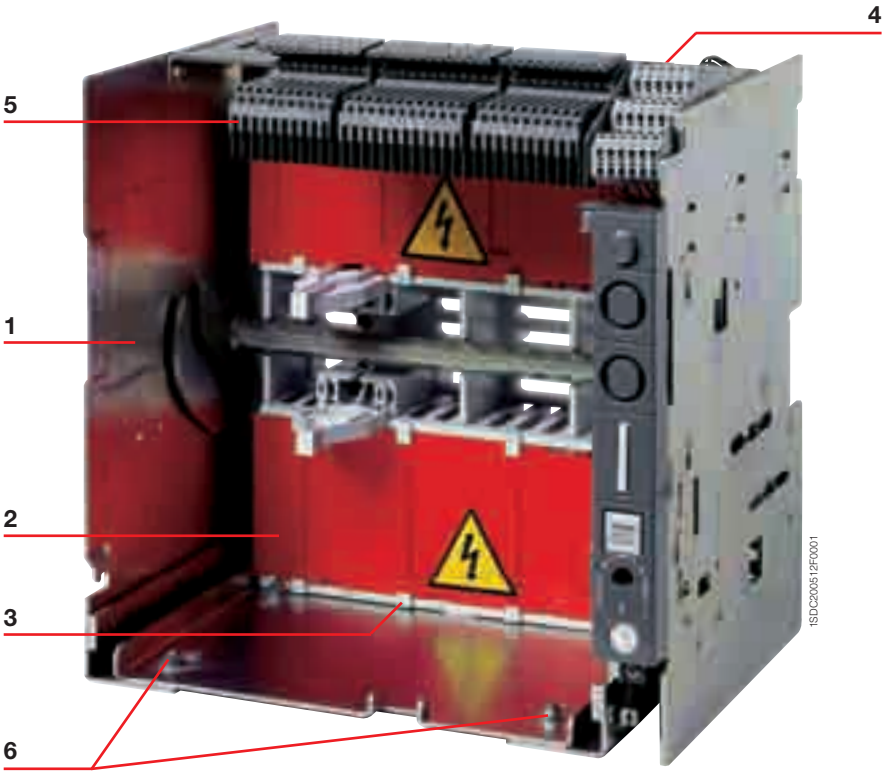

Construction characteristics

Utilization category

Selective and current-limiting circuit-breakers

Selective (not current-limiting) **circuit-breakers** are classified in class B (according to the IEC 60947-2 Standard). It is important to know their Icw values in relation to any possible delayed trips in the event of short-circuits.

The **current-limiting circuit-breaker** X1L belongs to class A. The short-time withstand current Icw is not very important for this circuit-breaker, and is necessarily low due to the operating principle on which it is based. The fact that it belongs to class A does not preclude the possibility of obtaining the necessary selectivity (e.g. current-type or time-type selectivity).
The special advantages of current-limiting circuit-breakers should also be underlined. In fact, they make it possible to:

- significantly reduce the peak current in relation to the prospective value;
- drastically limit specific let-through energy.

The resulting benefits include:

- reduced electrodynamic stresses;
- reduced thermal stresses;
- savings on the sizing of cables and busbars;
- the possibility of coordinating with other circuit-breakers in the series for back-up or discrimination.

Versions and connections

All the circuit-breakers of the Emax X1 range are available in fixed and withdrawable, three-pole or four-pole versions.
Each version offers terminals made of silverplated copper bars, with the same dimensions, regardless of the rated currents of the circuit-breakers.
The availability of various types of interchangeable terminals makes it possible to build wall-mounted switchgear, or switchgear to be accessed from behind with rear connections.
Furthermore, new horizontal rear terminals give Emax X1 maximum flexibility, allowing horizontal terminals to be changed to vertical ones and vice versa.

For fixed version, the following terminals are available:
– rear terminals (horizontal, vertical and adjustable)*
– front terminals
– extended front terminals
– spreaded front terminals
– multicable terminals for FC CuAl 4x240 mm^2
– multicable terminals for FC CuAl 2x240 mm^2

For withdrawable version:
– rear terminals (horizontal/vertical)*
– front extended terminals
– spreaded rear terminals
– spreaded front terminals

* It is possible to realise a varied combination of terminals (upper terminals different from the lower ones)

Fixed circuit-breaker

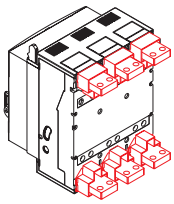
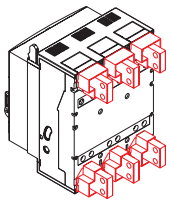

Rear terminals (horizontal, vertical or adjustable)

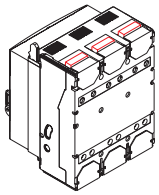

Front terminals

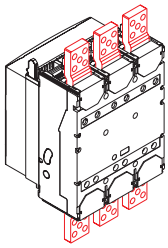

Front extended terminals

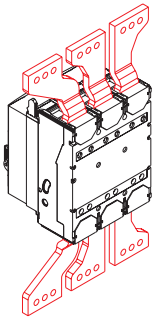

Spreaded front terminals

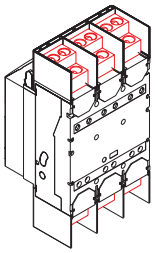

Multicable terminals for FC CuAl 4x240 mm^2

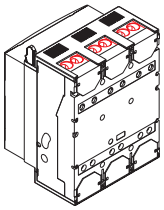

Multicable terminals for FC CuAl 2x240 mm^2

Withdrawable circuit-breaker

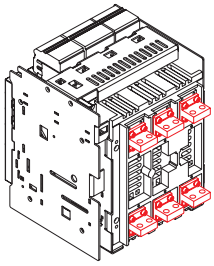

Adjustable rear terminals (horizontal or vertical)

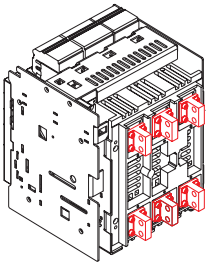

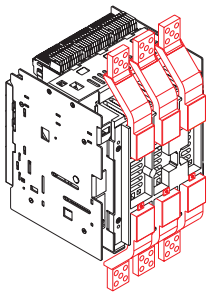

Front extended terminals

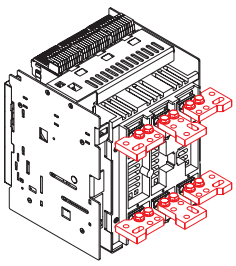

Spreaded rear terminals

Electronic trip units

General characteristics

The overcurrent protection for AC installations uses three types of electronic trip unit series: PR331/P, PR332/P and PR333/P.
The basic series, PR331/P, offers the whole set of standard protection functions, complete with a user-friendly interface. It allows discrimination of which fault caused the trip by means of the new led indications.
PR332/P and PR333/P trip units are of new concept modular architecture. It is now possible to have a complete series of protections, accurate measurements, signalling or dialogue functions, designed and customisable for all application requirements.
The protection system is made up of:

- 3 or 4 new generation current sensors (Rogowsky coil);
- external current sensors (i.e. for external neutral, residual current or source ground return protection);
- a protection unit selected among PR331/P, PR332/P or PR333/P with optional communication module via Modbus or Fieldbus plug network (PR332/P and PR333/P only), as well as via a wireless connection;
- a trip coil, which acts directly on the circuit-breaker operating mechanism (supplied with the protection unit).

General specifications of the electronic trip units include:

- operation without the need for an external power supply
- microprocessor technology
- high precision
- sensitivity to the true R.M.S. value of the current
- trip cause indication and trip data recording
- interchangeability among all types of releases
- setting for neutral configurable:
  – OFF-50%-100%-200% of phase setting

The main performance features of the electronic trip units are listed below.

PR331/P

	PR331/P	PR331/P	PR331/P
Protection	L I MCR*	L S I MCR*	L S I G MCR*

* optional

PR332/P

	PR332/P	PR332/P	PR332/P	PR332/P
Protection	L I MCR*	L S I MCR*	L S I G MCR*	L S I Rc MCR*

For all versions U OT M

Modules available:

PR330/V - Measuring	opz.	UV OV RV RP UF OF
PR330/D-M and PR330/R - Communication and implementation	opt.	

* optional

PR333/P

	PR333/P	PR333/P
Protection	L S I MCR*	L S I G MCR*

For all versions OT D U UV OV RV RP M UF OF

Modules available:

PR330/D-M and PR330/R - Communication and implementation	opt.

* optional

Electronic trip units

Versions available

1

Features

Protection functions		PR331/P	PR332/P	PR333/P
L	Protection against overload with inverse long time-delay trip	■	■	■
S	Selective protection against short-circuit inverse or definite short time-delay trip	■	■	■
S	Second selective protection against short-circuit inverse or definite short time-delay trip			■
I	Protection against instantaneous short-circuit with adjustable trip current threshold	■	■	■
G	Protection against earth fault — residual	■	■	■
	Protection against earth fault — source ground return		■	■
Rc	Residual current protection (1)		■	opt.(2)
MCR	Protection against closing under short-circuit	with AUX - MCR	with AUX - MCR	with AUX - MCR
D	Protection against directional short-circuit with adjustable time-delay			■
U	Protection against phase unbalance		■	■
OT	Protection against overtemperature (check)		■	■
UV	Protection against undervoltage		with PR330/V	■
OV	Protection against overvoltage		with PR330/V	■
RV	Protection against residual voltage		with PR330/V	■
RP	Protection against reverse active power		with PR330/V	■
M	Thermal memory for functions L and S	■	■	■
UF	Underfrequency		with PR330/V	■
OF	Overfrequency		with PR330/V	■
Measurements				
Currents (phases, neutral, earth fault)			■	■
Voltage (phase-phase, phase-neutral, residual)			with PR330/V	■
Power (active, reactive, apparent)			with PR330/V	■
Power factor			with PR330/V	■
Frequency and peak factor			with PR330/V	■
Energy (active, reactive, apparent, meter)			with PR330/V	■
Harmonics calculation (display of wave forms and harmonics module)				■
Event marking and maintenance data				
Event marking with time stamp		opt.(3)	■	■
Chronological event storage		opt.(3)	■	■
Counting the number of operations and contact wear			■	■
Communication with supervision system and centralised control				
Remote parameter setting of the protection functions, unit configuration, communication			with PR330/D-M	with PR330/D-M
Transmission of measurements, states and alarms from circuit-breaker to system			with PR330/D-M	with PR330/D-M
Transmission of the events and maintenance data from circuit-breaker to system			with PR330/D-M	with PR330/D-M
Watchdog				
Alarm and trip for release overtemperature			■	■
Check of the release status		■	■	■
Interface with the user				
Presetting parameters by means of dip switches		■		
Presetting parameters by means of keys and LCD viewer			■	■
Alarm signals for functions L, S, I and G		■	■	■
Alarm signal of all the following protections: undervoltage, overvoltage, residual voltage, active reverse of power, phase unbalance, overtemperature, inversion of cyclical sense of the phases			with PR330/V	■
Complete management of pre-alarms and alarms for all the self-control protection functions			■	■
Enabling password for use with consultation in “READ” mode or consultation and setting in “EDIT” mode		■	■	
Correct control of phase cycle				■
Load control				
Load connection and disconnection according to the current passing through the circuit-breaker			■	■
Zone selectivity				
Can be activated for protection functions S, G and (PR333/P only) D			■	■

(1) requires a homopolar toroid for residual current protection; (2) with residual current toroidal transformer, PR333/P LSIG and rating plug Rc; (3) with communication unit BT030 or PR010T

Electronic trip units

Rating plugs

Rating plugs

Type of circuit-breaker	Rated current I_u	In [A] 400	630	800	1000	1250	1600
X1B	630	■	■				
	800	■	■	■			
	1000	■	■	■	■		
	1250	■	■	■	■	■	
	1600	■	■	■	■	■	■
X1N	630	■	■				
	800	■	■	■			
	1000	■	■	■	■		
	1250	■	■	■	■	■	
	1600	■	■	■	■	■	■
X1L	630	■	■				
	800	■	■	■			
	1000	■	■	■	■		
	1250	■	■	■	■	■	

1

Compliance with Standards

Standards, approvals and certifications

1

Emax X1 and their accessories conform to the international IEC 60947, EN 60947 (harmonized in 28 CENELEC countries), CEI EN 60947 and IEC 61000 Standards, and comply with following EC directives:

– "Low Voltage Directives" (LVD) no. 2006/95/CE (replaces 72/23/EEC and subsequent amendments).
– "Electromagnetic Compatibility Directive" (EMC) nr. 89/336 EEC.

The following Shipping Registers certifications are being approved:

– RINA (Italian Naval Register)
– Det Norske Veritas
– Bureau Veritas
– Germanischer Lloyd
– Loyd's Register of Shipping
– Polskj Rejestr Statkow
– ABS (American Bureau of Shipping)
– RMRS (Russian Maritime Register of Shipping)
– NK (Nippon Kaiji Kyokai)

The Emax X1 has also a range which is under certification according to the severe American UL 1066 and UL 489 Standards, the Russian GOST (Russia Certificate of Conformity) certification organization, and CCC (China Compulsory Certification).

Certification of conformity with the aforementioned product Standards is carried out in compliance with European Standard EN 45011 by the Italian certification body ACAE (Associazione per la Certificazione delle Apparecchiature Elettriche - Association for Certification of Electrical Apparatus), recognized by the European organization LOVAG (Low Voltage Agreement Group).

Note: Contact ABB SACE for a list of approved types of circuit-breakers, approved performance data and the corresponding validity

Compliance with Standards

A design dedicated to Quality and respect for the environment

Quality, environment, health and safety have always been ABB SACE's major commitment. This commitment involves every function of the company, and has allowed us to achieve prestigious recognition internationally.
The company's quality management system is certified by RINA, one of the most prestigious international certification boards, and complies with ISO 9001-2000 Standards; the ABB SACE test facility is accredited by SINAL; the plants in Frosinone, Patrica, Vittuone and Garbagnate Monastero are also certified in compliance with ISO 14001 and OHSAS 18001 standards for health and safety in the workplace.

ABB SACE, Italy's first industrial company in the electro-mechanical sector to achieve this, has been able to reduce its raw material consumption and machining scrap by 20% thanks to an ecology-centred revision of its manufacturing process. All of the company's Divisions are involved in streamlining raw material and energy consumption, preventing pollution, limiting noise pollution and reducing scrap resulting from manufacturing processes, as well as in carrying out periodic environmental audits of leading suppliers.

ABB SACE is committed to environmental protection, as is also evidenced by the Life Cycle Assessments (LCA) of products carried out at the Research Centre: this means that assessments and improvements of the environmental performance of products throughout their lifecycle are included right from the initial engineering stage. The materials, processes and packaging used are chosen with a view to optimising the actual environmental impact of each product, including its energy efficiency and recyclability.

XT by Emax


SACE PR332/P
ALARM
WARNING
COM
Power
Tx
Rx
In=160A
17:05:20
625A
ESC
ABB
DISCHARGED SPRINGS

Installations

Contents

Installation in switchgear

Extremely reduced volumes

The Emax X1 circuit-breakers have been built according to modular design criteria for easier installation and integration in low voltage electrical switchgear, thanks to a significant reduction in their overall installation dimensions, particularly in width and depth.
This allows the realization of switchgear dimensions particularly reduced, characteristic which makes the Emax X1 especially suitable where spaces saving is needed: for example in applications as on boards of ships, in mines, on drilling platforms and windmill turbine.
Emax circuit-breakers are suitable for Power Center switchgear and make it easy to comply with the segregation requirements of the IEC 60439-1 Standards.

Installation in switchgear

Choosing the type of circuit-breaker

Number of poles

The choice of the number of poles for circuit-breakers that simultaneously provide switching, protection and isolation functions in three-phase installations depends on the type of electrical system (TT, TN-S, TN-C, IT) and the type of user or, more generally, whether it features a distributed or non-distributed neutral.

Three-pole circuit-breakers

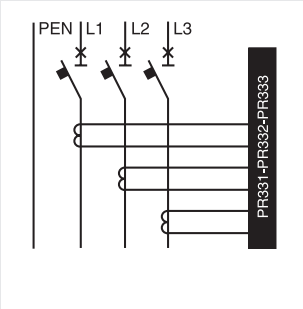

For TN-C systems (the neutral cannot be interrupted because it also acts as the protection conductor).

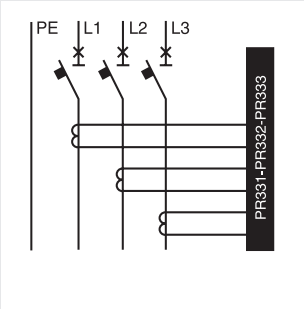

For users that do not use the neutral (e.g.: asynchronous motors) and, for systems with undistributed neutral in general.

Four-pole circuit-breakers

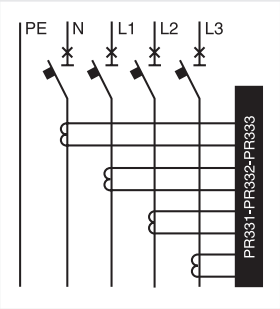

In all other instances, with exceptions for the IT system (see CEI 64-8/473.3.2.2 Standards).

Three-pole circuit-breakers with external neutral

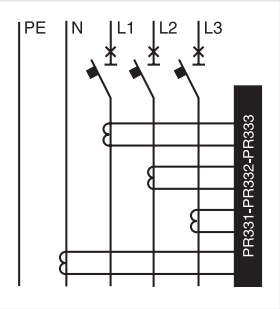

Current transformers can be installed on the external neutral of five-wire systems (TN-S) with 3-pole circuit-breakers.

Fixed or withdrawable version

The fixed version of the circuit-breaker is more compact in size than the withdrawable version. It is recommended for installations that can tolerate service interruptions in the event of faults or programmed maintenance.

The withdrawable version of the circuit-breaker is recommended for:

– applications that can only tolerate brief interruptions due to faults or programmed maintenance;

– dual lines, one of which is a standby for the other, with a single circuit-breaker for each pair.

The moving part of a circuit-breaker in withdrawable version may be in three position inside the fixed part: racked-in, test isolated and racked-out.

"Racked-in" refers to the position in which both the power contacts and auxiliary contacts are connected; "racked-out" is the position in which both the power contacts and auxiliary contacts are disconnected; "test isolated" is the position in which the power contacts are disconnected, whereas the auxiliary contacts are connected.

Installation in switchgear

Choosing the type of circuit-breaker

Connecting the main circuit-breaker circuits

When designing switchgear, it is always necessary to find the most rational connections between the circuit-breaker and main busbar system and from the busbars to the users. Emax X1 offers switchgear manufacturers a range of options to satisfy different circuit-breaker connection requirements.
The circuit-breakers can be fitted with various combinations of top and bottom terminals.
The figures below give some indications for terminal selection.

2

Switchgear with access from the rear:

Horizontal rear terminals

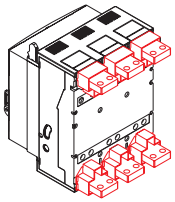

Vertical rear terminals

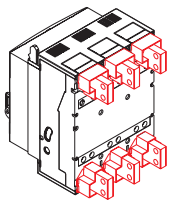

Spreaded rear terminals

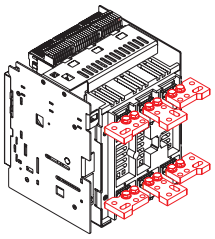

Wall-mounted switchgear, with access from the front only:

Front terminals

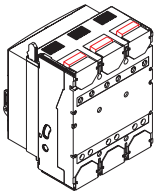

Extended front terminals

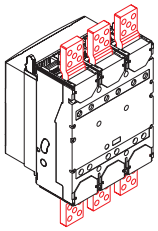

Spreaded front terminals

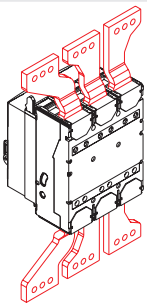

Multicable terminals for FC CuAl - 4x240 mm²

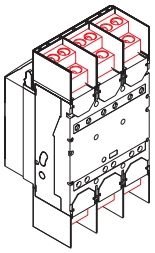

Multicable terminals for FC CuAl - 2x240 mm²

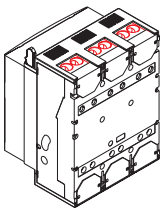

Extended front terminals - EF

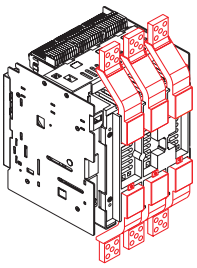

Installation

The new Emax X1, in the fixed and withdrawable versions, can be installed on a back plate both in the vertical and horizontal position, without jeopardising the rated characteristics of the circuit-breaker. In the vertical position, the circuit-breaker can also be installed flat, fixing it by means of shoulders provided as standard.
In compliance with the IEC 60947-2 Standards, Emax circuit-breakers can also be supplied through either top or bottom terminals, without jeopardizing the apparatus functionality.
Those characteristics allow maximum flexibility of use and make it easier the installation in switchgear.

Protection Degrees

A number of solutions have been adopted on Emax circuit-breakers to achieve IP20 degree of protection for fixed or withdrawable circuit-breakers, excluding the terminals, and IP30 for their front parts using a flange. Automatic shutters have been designed for the fixed parts of withdrawable circuit-breakers which can be locked using padlock devices to allow maintenance on the load side or on the power-supply side of the fixed part.
A transparent protective cover is also available on request, to completely segregate the front of the circuit-breaker, reaching IP54 degree of protection. In any case, the front panel and protection trip unit with the relative indications remain completely visible.

IP20 Fixed or withdrawable version circuit-breaker, excluding the terminals.
IP30 Front parts of the circuit-breakers (using a flange).
IP54 Fixed or withdrawable version circuit-breaker, fitted with transparent protective cover to be fixed onto the front of the switchgear (on request).

Installation in switchgear

Current-carrying capacity in switchgear

2

Power losses

The IEC 439-1 and CEI EN 60439-1 Standards prescribe calculations for determining the heat dissipation of ANS type switchgear (non-standard), for which the following must be taken into consideration:

– the overall dimensions
– the rated current of the bus-bars and connections and the relative dissipation
– the dissipated power of the apparatus mounted in the switch-gear.

For this point, the table beside provides information on the circuit-breakers. For other apparatus, please consult the catalogues of the relative manufacturers.

Note
The same standards prescribe type tests for AS switchboards (standard factory manufactured switchgear), including those for maximum temperature rise.

Power losses

Circuit-breaker	Iu [A]	Fixed 3/4 Poles [W]	Withdrawable 3/4 Poles [W]
X1 B-N	630	31	60
	800	51	104
	1000	79	162
	1250	124	253
	1600	203	415
X1 L	630	61	90
	800	99	145
	1000	155	227
	1250	242	354

Note
The table values refer to balanced loads, a current flow of Iu, and automatic circuit-breakers.

Current-carrying capacity in switchgear

As an example, the following table shows the continuous current carrying capacity for circuit-breakers installed in a switchgear with the following dimensions: 1800 x 500 x 600 (HxWxD). These values refer to withdrawable version circuit-breaker installed in non-segre-gated switchgear with a degree of protection up to IP31.
The values refer to a maximum temperature at the terminals of 120°C.

X1 Vertical terminals in a IP31 switchgear (H=1800, W=500, D=600)

	35° C	45° C	55°C	busbars	section
X1 B/N/L 06	630	630	630	2x40x5	400
X1 B/N/L 08	800	800	800	2x50x5	500
X1 B/N 10	1000	1000	1000	2x50x8	800
X1 L 10	1000	1000	1000	2x50x8	800
X1 B/N 12	1250	1250	1250	2x50x8	800
X1 L 12	1250	1205	1050	2x50x8	800
X1 B/N 16	1520	1440	1330	2x50x10	1000

X1 Horizontal terminals in a IP31 switchgear (H=1800, W=500, D=600)

	35° C	45° C	55°C	busbars	section
X1 B/N/L 06	630	630	630	2x40x5	400
X1 B/N/L 08	800	800	800	2x50x5	500
X1 B/N 10	1000	1000	1000	2x50x10	1000
X1 L 10	1000	1000	950	2x50x10	1000
X1 B/N 12	1250	1250	1160	2x50x10	1000
X1 L 12	1250	1125	955	2x50x10	1000
X1 B/N 16	1440	1360	1290	3x50x8	1200

Note
The tables should be used solely as a general guideline for selecting products.
Due to the extensive variety of switchgear construction shapes and conditions that can affect the behavior of the apparatus, the solution used must always be verified.

Changing the rated uninterrupted current in relation to the temperature

Temperature derating

The circuit-breakers can operate at higher temperatures than their reference temperature (40 °C) under certain installation conditions. In these cases the current-carrying capacity of the switchgear should be reduced.
The Emax series of air circuit-breakers uses electronic trip units which offer the benefit of great operating stability when subjected to temperature changes.
The tables below show the current-carrying capacities of the circuit-breakers (as absolute values and percentage values) in relation to their rated values at T = 40 °C (temperature inside the switchboard around the circuit-breaker and its connections).

Withdrawable X1 - horizontal rear

Temperature	X1 630		X1 800		X1 1000		X1 1250		X1 1600	
[°C]	%	[A]	%	[A]	%	[A]	%	[A]	%	[A]
10	100	630	100	800	100	1000	100	1250	100	1600
20	100	630	100	800	100	1000	100	1250	100	1600
30	100	630	100	800	100	1000	100	1250	100	1600
40	100	630	100	800	100	1000	100	1250	100	1600
45	100	630	100	800	100	1000	100	1250	100	1600
50	100	630	100	800	100	1000	100	1250	97	1550
55	100	630	100	800	100	1000	100	1250	94	1500
60	100	630	100	800	100	1000	100	1250	93	1480

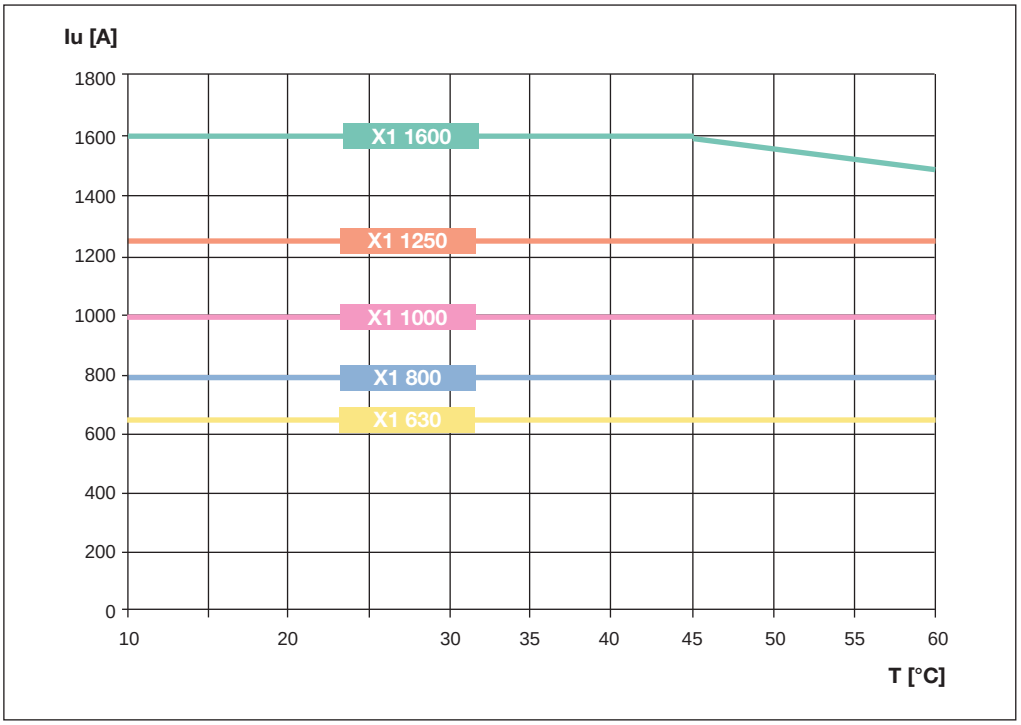

Changing the rated uninterrupted current in relation to the temperature

Temperature derating

Withdrawable X1 - vertical rear

Temperature	X1 630		X1 800		X1 1000		X1 1250		X1 1600	
[°C]	%	[A]	%	[A]	%	[A]	%	[A]	%	[A]
10	100	630	100	800	100	1000	100	1250	100	1600
20	100	630	100	800	100	1000	100	1250	100	1600
30	100	630	100	800	100	1000	100	1250	100	1600
40	100	630	100	800	100	1000	100	1250	100	1600
45	100	630	100	800	100	1000	100	1250	100	1600
50	100	630	100	800	100	1000	100	1250	100	1600
55	100	630	100	800	100	1000	100	1250	98	1570
60	100	630	100	800	100	1000	100	1250	95	1520

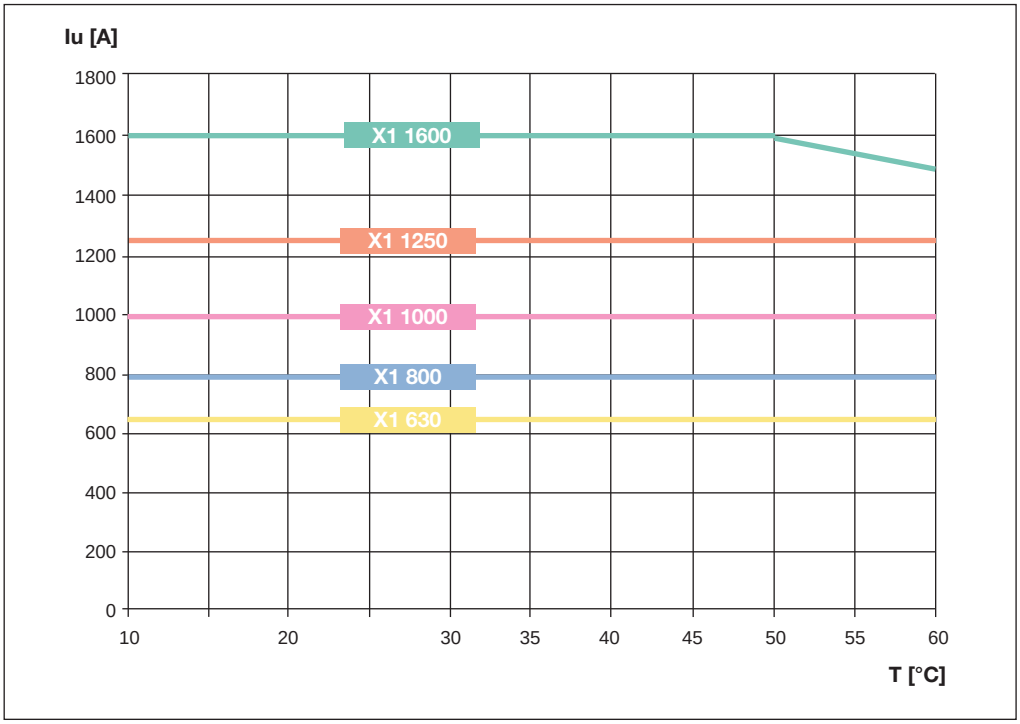

Derating at different altitudes

Emax X1 air circuit-breakers as well as the other sizes in the Emax family, do not undergo any changes in their rated performance up to an altitude of 2000 meters.
As the altitude increases the atmospheric properties alter in terms of composition, dielectric capacity, cooling power and pressure.
The performance of the circuit-breakers therefore undergoes derating, which can be measured through the variation in significant parameters such as the maximum operating voltage and the rated uninterrupted current.
The table below shows these values in relation to altitude.

Altitude	**H**	[m]	<2000	3000	4000	5000
Rated service voltage	**Ue**	[V]	690	600	500	440
Rated current	**In**	[A]	In	0.98xIn	0.93xIn	0.90xIn

Current-limiting and specific let-through energy curves for X1L limiting circuit-breakers

The current-limiting capacity of a current-limiting circuit-breaker indicates its greater or lesser capacity, under short-circuit conditions, to let through or make a current lower than the prospective fault current.

This characteristic is shown by two different curves which indicate the following, respectively:

– the value of the specific energy "I^2t" (in A^2s) let through by the circuit-breaker in relation to the uninterrupted symmetrical short-circuit current.

– the peak value (in kA) of the limited current in relation to the uninterrupted symmetrical short-circuit current.

The graph shown at the side schematically indicates the trend of the uninterrupted current, with the relative established peak (curve B), and the trend of the limited current with the lowest peak value (curve A).

Comparing the areas beneath the two curves shows how the specific let-through energy is reduced as a result of the limiting effects of the circuit- breaker.

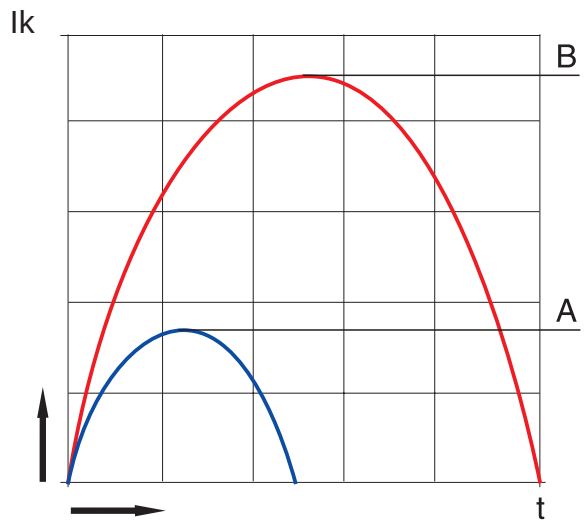

A peak limited Ik

B prospective Ik (peak value)

1SDC200091F0001

X1L

Current-limiting curves

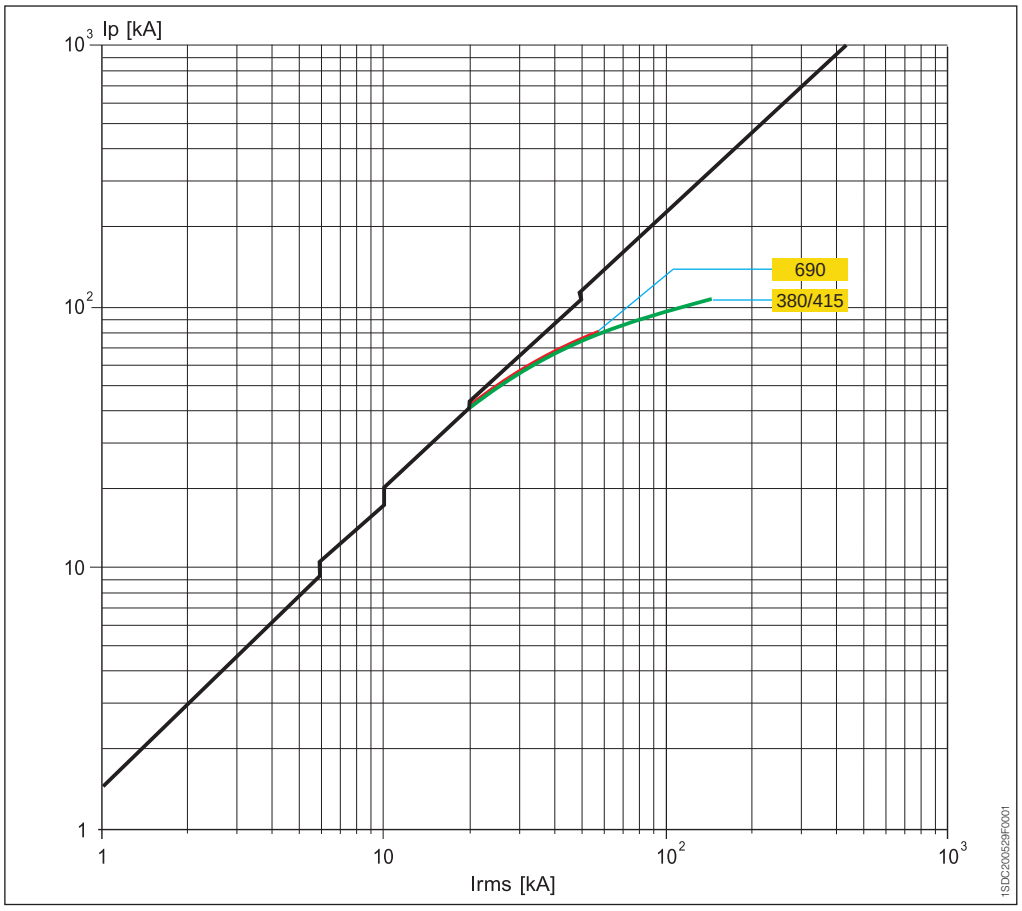

X1L

Specific let-through energy curves

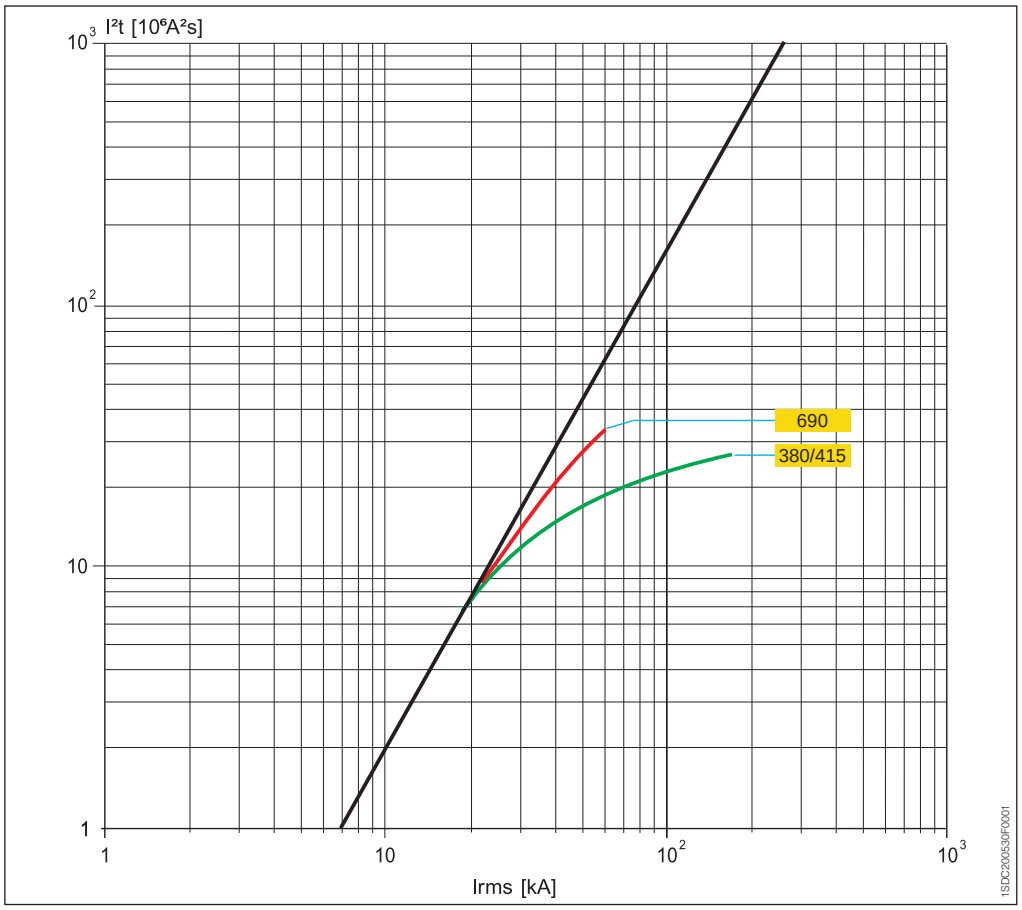

Irms prospective symmetrical short-circuit current

Ip peak current

I²t specific let-through energy at the voltages indicated

X1 by Emax


SACE PR332/P
625A
ALARM
WARNING
COM
Power
TX
RX
In=1600A
ESC
ABB

Trip units and related accessories

Contents

Protection trip units and trip curves

PR331/P

Characteristics

PR331/P is the new basic and complete trip unit for the Emax series. The complete range of protection functions together with the wide combination of thresholds and trip times offered make it suitable for protecting a wide range of alternating current installation. In addition to protection functions the unit is provided with multifunction LED indicators. Furthermore, PR331/P allows connection to external devices enhancing its advanced characteristics like remote signaling and monitoring, or remote supervision display.

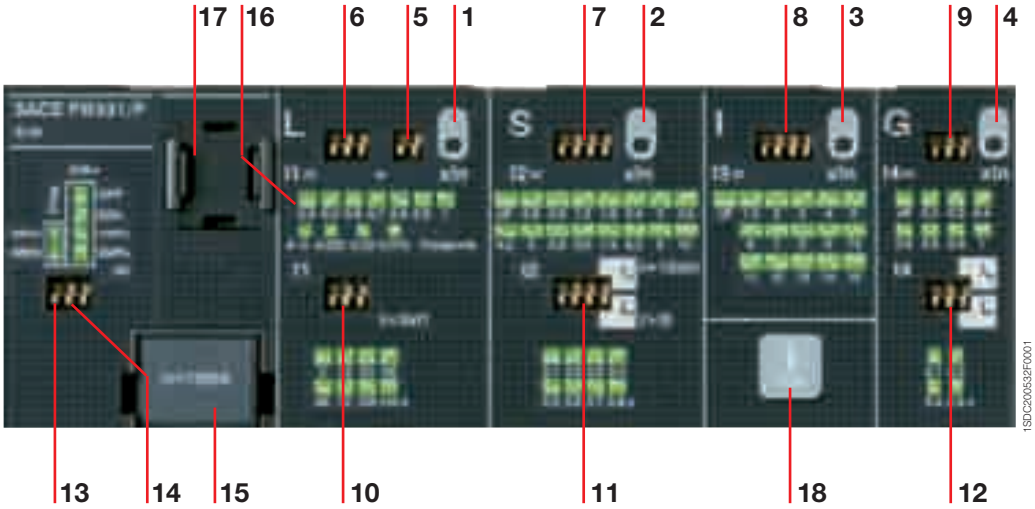

Caption

1 LED signalling Alarm and prealarm for protection function L

2 LED signalling Alarm for protection function S

3 LED signalling Alarm for protection function I

4 LED signalling Alarm for protection function G

5 DIP switches for fine setting current threshold I1

6 DIP switches for main setting current threshold I1

7 DIP switches for setting current threshold I2

8 DIP switches for setting current threshold I3

9 DIP switches for setting current threshold I4

10 DIP switches for setting trip time t1 (type of curve)

11 DIP switches for setting trip time t2 (type of curve)

12 DIP switches for setting trip time t4 (type of curve)

13 Indication of the DIP switch position for network frequency

14 Indication of the DIP switch position for Neutral protection setting

15 Rating plug

16 Indication of the DIP switch positions for the various current thresholds values I1

17 TEST connector for connecting or testing the trip unit by means of an external device (PR030/B battery unit, BT030 wireless communication unit and PR010/T unit).

18 Info-test button

Operation and protection functions

Protection functions

The PR331/P trip unit offers the following protection functions:

- overload (L)
- selective short-circuit (S)
- instantaneous short-circuit (I)
- earth fault (G).

Overload (L)

The inverse long time-delay trip overload protection L is type I^2t = k; 25 current thresholds and 8 curves are available.
Each curve is identified by the trip time in relation to the current I = 3 x I1 (I1 = set threshold).

Selective short-circuit (S)

The selective short-circuit protection S can be set with two different types of curves with a trip time independent of the current (t = k) or with a constant specific let-through energy ($t = k/I^2$).

15 current thresholds and 8 curves are available, allowing a fine setting. Each curve is identified as follows:

– for curves t = k by the trip time for I > I2
– for curves $t = k/I^2$ by the trip time for I = 10xIn (In = rated current of the circuit-breaker).

The function can be excluded by setting the DIP switches to the combination labelled "OFF".

Adjustable instantaneous short-circuit (I)

The protection I offers 15 trip thresholds and can be excluded (dip switches in "OFF" position). As an alternative to protection I, by means of PR010/T or via SD-Testbus2 or SD-Pocket software, it is possible to activate the MCR* protection to protect the plant from any closures under short-circuit.

Earth fault (G)

The earth fault protection G (which can be excluded) offers 7 current thresholds and 4 curves. Each curve is identified by the time t4 in relation to current I4. As per S protection the trip time can be chosen independent of the current (t = k) or with a constant specific let-through energy ($t = k/I^2$).

* said protection is available if there is an AUX-MCR contact (1SDA065235R1)

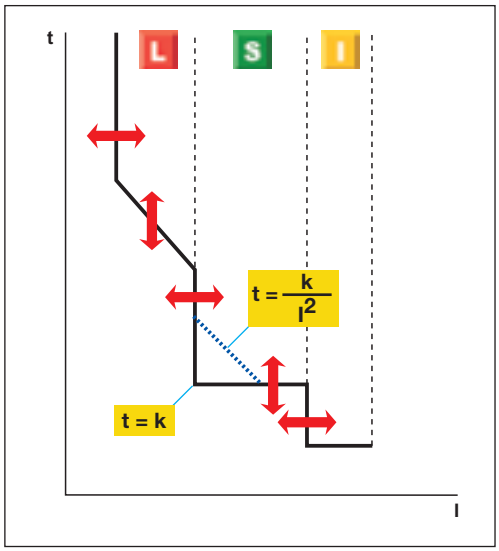

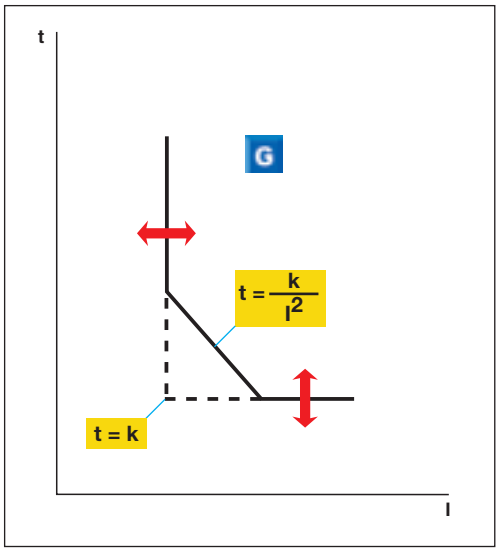

Protection trip units and trip curves

PR331/P

User interface

The user communicates directly with the trip unit in the trip parameter preparation stage by means of the dip switches.
Up to four LEDs (according to the version) are also available for signalling.
These LEDs (one for each protection) are active when:

- a protection is timing. For protection L the prealarm status is also shown;
- a protection has tripped (the corresponding LED is activated by pressing the “Info/Test” pushbutton);
- a failure in connection of a current sensor or in the trip coil is detected. The indication is active when the unit is powered (through current sensors or an auxiliary power supply);
- wrong rating plug for the circuit-breaker.

The protection tripped indication works even with the circuit-breaker open, without the need for any internal or external auxiliary power supply. This information is available for 48 hours of inactivity after the trip and is still available after reclosing. If the query is made more than 48 hours later it is sufficient to connect a PR030/B battery unit, PR010/T, or a BT030 wireless communication unit.
There is programmable contact in the device, which can be set using PR010/T, SD-Testbus2 or SD Pocket and combined with numerous events.

3

Communication

By means of the BT030 wireless communication unit, PR331/P can be connected to a pocket PC (PDA) or to a personal computer, extending the range of information available for the user. In fact, by means of ABB SACE’s SD-Pocket communication software, It is possible to read the values of the currents flowing through the circuit-breaker, the value of the last 20 interrupted currents, and the protection settings.
PR331/P can also be connected to the HMI030 unit, for the remote user interfacing.

Setting the neutral

Protection of the neutral can be set at 50%, 100% or 200% of the phase currents. In particular, adjustment of the neutral at 200% of the phase current is possible if the following inequality is respected: I1 x In x %N < Iu. The user can also switch the neutral protection OFF.

Test Function

The Test function is carried out by means of the info/Test pushbutton and the PR030/B battery unit (or BT030) fitted with a polarized connector housed on the bottom of the box, which allows the device to be connected to the test connector on the front of PR331/P releases.
The PR331/P electronic trip unit can be tested by using the PR010/T test and configuration unit by connecting it to the TEST connector.

Versions available

The following versions are available:

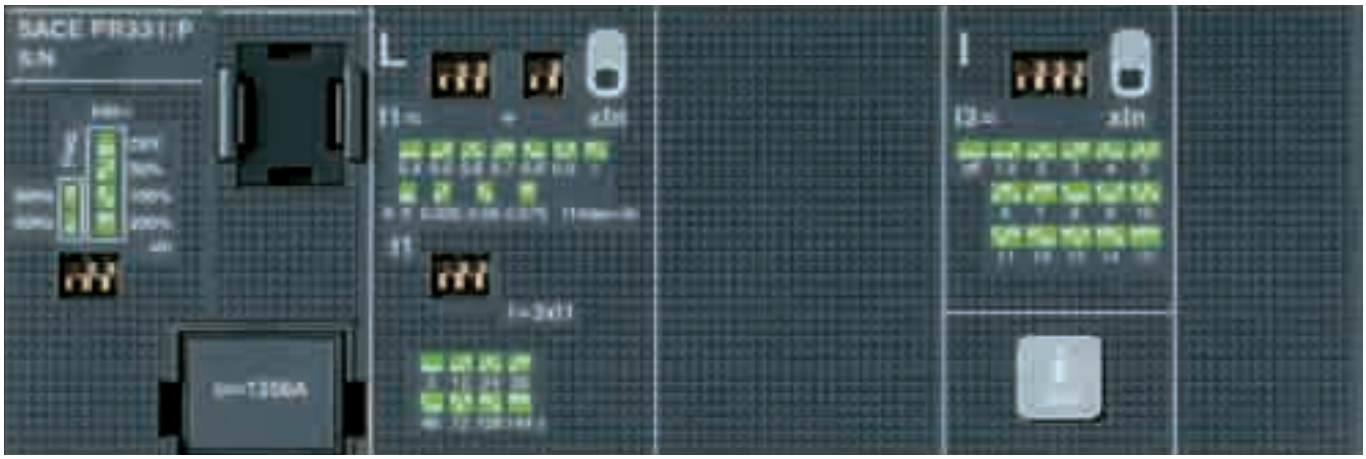

1SDC200533F0001

PR331/P LI

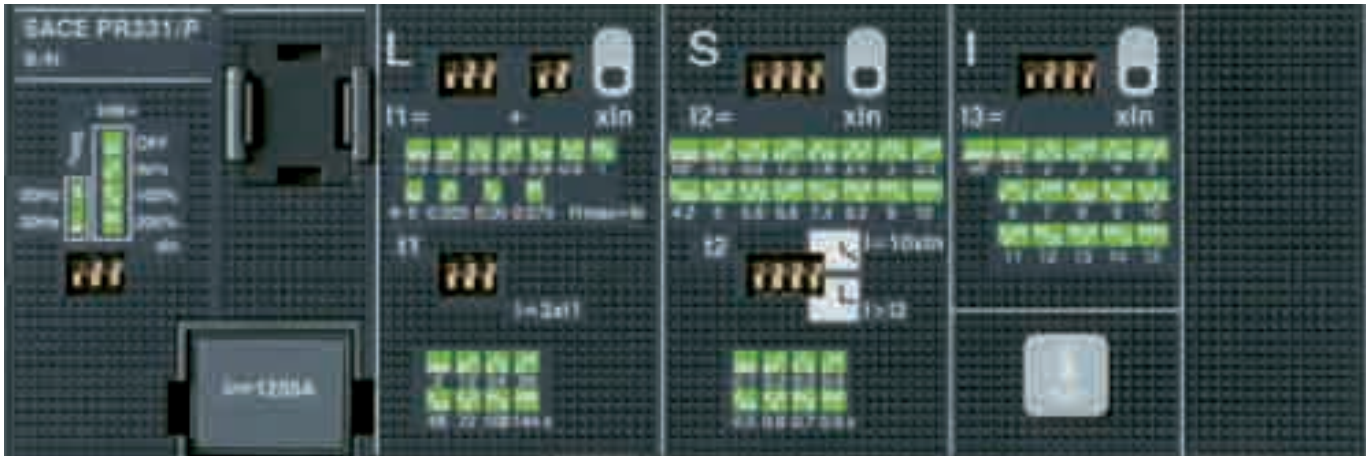

1SDC200534F0001

PR331/P LSI

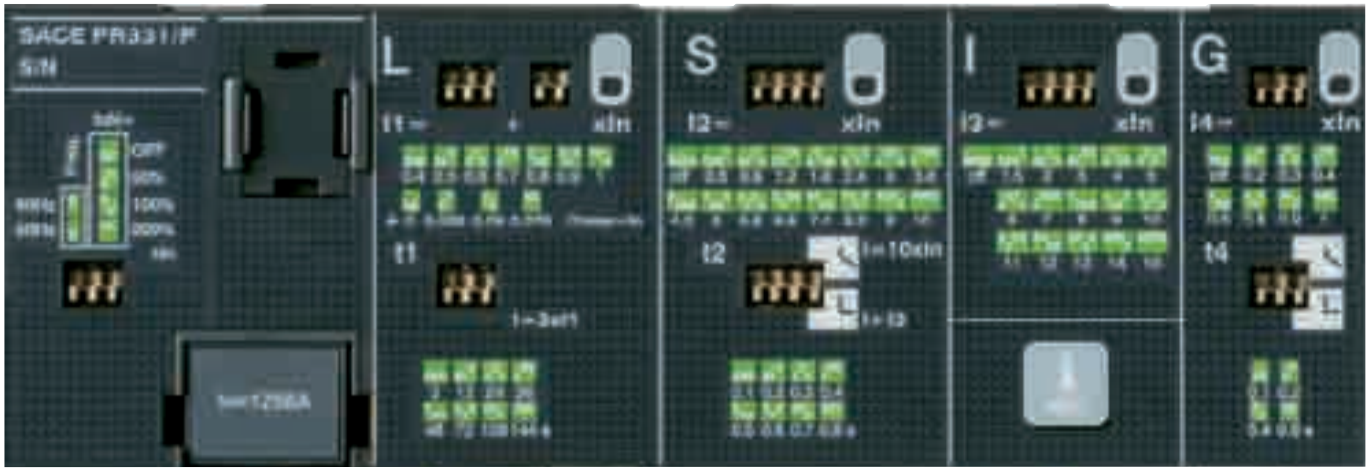

1SDC200532F0001

PR331/P LSIG

Protection trip units and trip curves

PR331/P

Protection functions and setting values - PR331/P

Function		Trip threshold	Trip time*	Poss. excl.	Relation t=f(I)
L	Overload protection	**I1**= 0.4 - 0.425 - 0.45 - 0.475 - 0.5 - 0.525 - 0.55 - 0.575 - 0.6 - 0.625 - 0.65 - 0.675 - 0.7 - 0.725 - 0.75 - 0.775 - 0.8 - 0.825 - 0.85 - 0.875 - 0.9 - 0.925 - 0.95 - 0.975 - 1 x In	With If = 3 x I1 t1 = 3 - 12 - 24 - 36 - 48 - 72 - 108 - 144 s (1)	–	$t=k/I^2$
	Tolerance (2)	Trip between 1.05 and 1.2 x I1	± 10% If ≤ 6 x In ± 20% If > 6 x In		
S	Selective short-circuit protection	**I2**= 0.6 - 0.8 - 1.2 - 1.8 - 2.4 - 3 - 3.6 - 4.2 - 5 - 5.8 - 6.6 - 7.4 - 8.2 - 9 - 10 x In	With If = 10 x In t2 = 0.1 - 0.2 - 0.3 - 0.4 - 0.5 - 0.6 - 0.7 - 0.8 s	■	$t=k/I^2$
	Tolerance (2)	± 7% If ≤ 6 x In ± 10% If > 6 x In	± 15% If ≤ 6 x In ± 20% If > 6 x In		
		I2= 0.6 - 0.8 - 1.2 - 1.8 - 2.4 - 3 - 3.6 - 4.2 - 5 - 5.8 - 6.6 - 7.4 - 8.2 - 9 - 10 x In	With If > I2 t2 = 0.1 - 0.2 - 0.3 - 0.4 - 0.5 - 0.6 - 0.7 - 0.8 s	■	t=k
	Tolerance (2)	± 7% If ≤ 6 x In ± 10% If > 6 x In	The best of the two data: ± 10% or ± 40 ms		
I	Instantaneous short-circuit protection	**I3**= 1.5 - 2 - 3 - 4 - 5 - 6 - 7 - 8 - 9 - 10 - 11 - 12 - 13 - 14 - 15 x In	≤ 30 ms	■	t=k
	Tolerance (2)	± 10%			
G	Earth fault protection	**I4**= 0.2 - 0.3 - 0.4 - 0.6 - 0.8 - 0.9 - 1 x In	If=4.47xI4 t4=0.1 s If=3.16xI4 t4=0.2 s If=2.24xI4 t4=0.4 s If=1.58xI4 t4=0.8 s	■	$t=k/I^2$
	Tolerance (2)	± 7%	± 15%		
		I4= 0.2 - 0.3 - 0.4 - 0.6 - 0.8 - 0.9 - 1 x In	With If > I4 t4 = 0.1 - 0.2 - 0.4 - 0.8 s	■	t=k
	Tolerance (2)	± 7%	The best of the two data: ± 10% o ± 40 ms		
MCR	Protection against closing under short-circuit	**I5**= 6.0 - 6.1 - 6.2 - 6.3 - 6.4 . . . 14.5 - 14.6 - 14.7 - 14.8 - 14.9 - 15 x In	≤ 30 ms	■	t=k
	Tolerance (2)	± 10%			

* Referring to the electronics
If = fault current
(1) The minimum trip time is 1 s, regardless of the type of curve set (self-protection)
(2) These tolerances are valid in the following conditions:
- self-supplied release at full power (without start-up)
- two- or three-phase power supply
- auxiliary power supply available

The following tolerance values apply in all cases not covered by the above:

	Trip time
L	± 20%
S	± 20%
I	≤ 60ms
G	± 20%

Power supply

The unit does not require an external power supply either for protection functions or for alarm signalling functions. It is self-supplied by means of the current sensors installed on the circuitbreaker. For it to operate, it is sufficient for the three phases to be loaded at 70A. An external power supply can be connected in order to activate additional features, and in particular for connection to external devices as HMI030 and PR021/K.

	PR331/P
Auxiliary power supply (galvanically insulated)	24 V DC ± 20%
Maximum ripple	5%
Inrush current @ 24V	~1 A for 5 ms
Rated power @ 24V	~2 W

Functions L-I

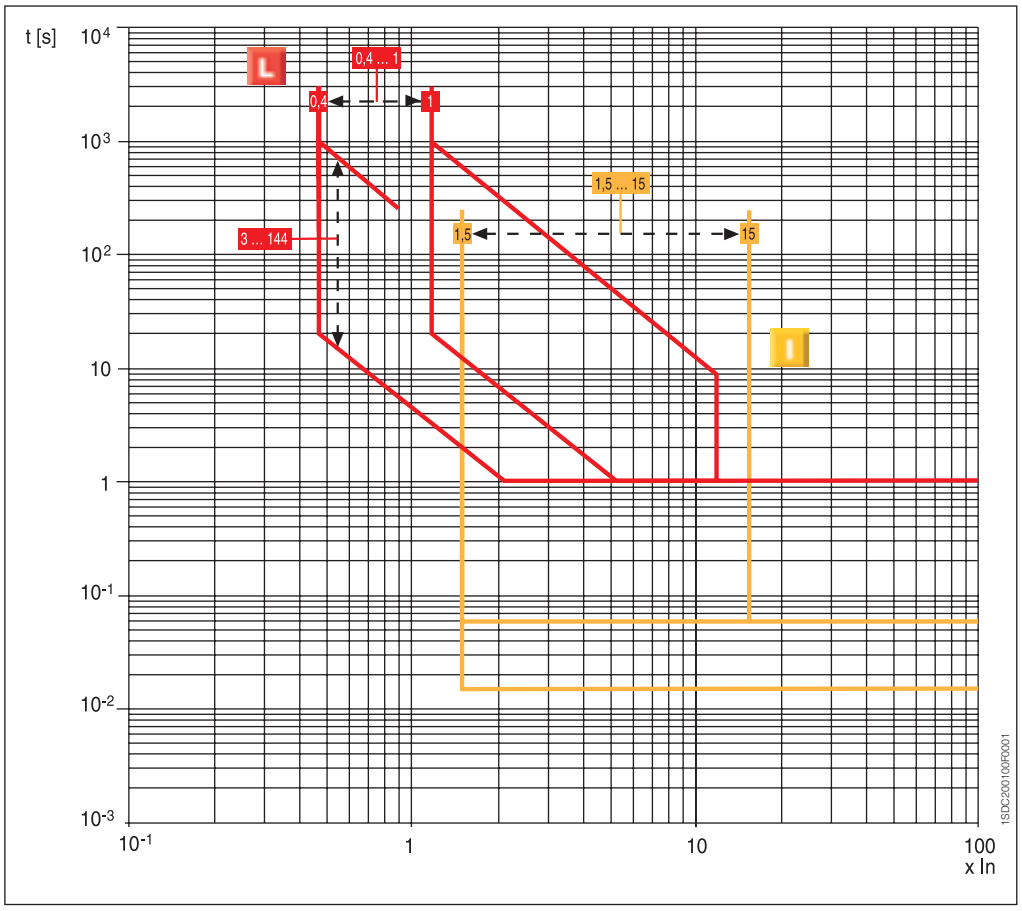

Functions L-S-I

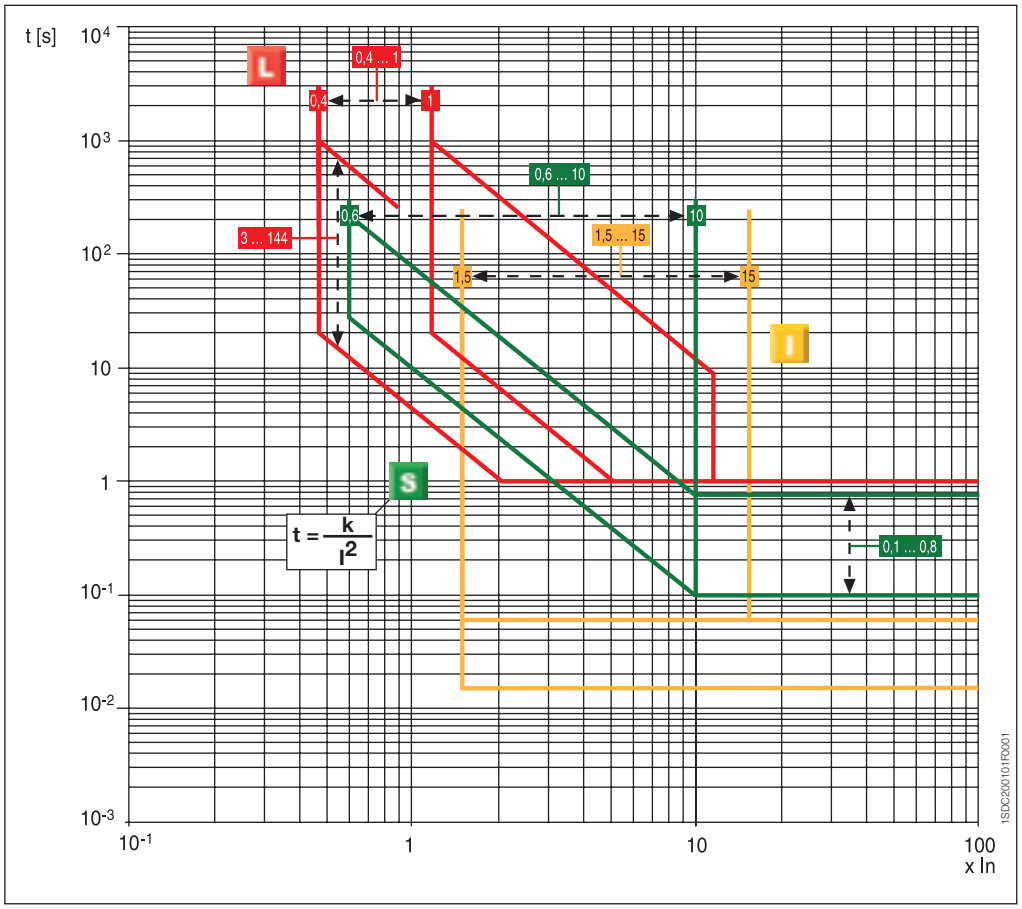

Threshold and trip times tolerances .....page 3/6

Protection trip units and trip curves

PR331/P

Functions L-S-I

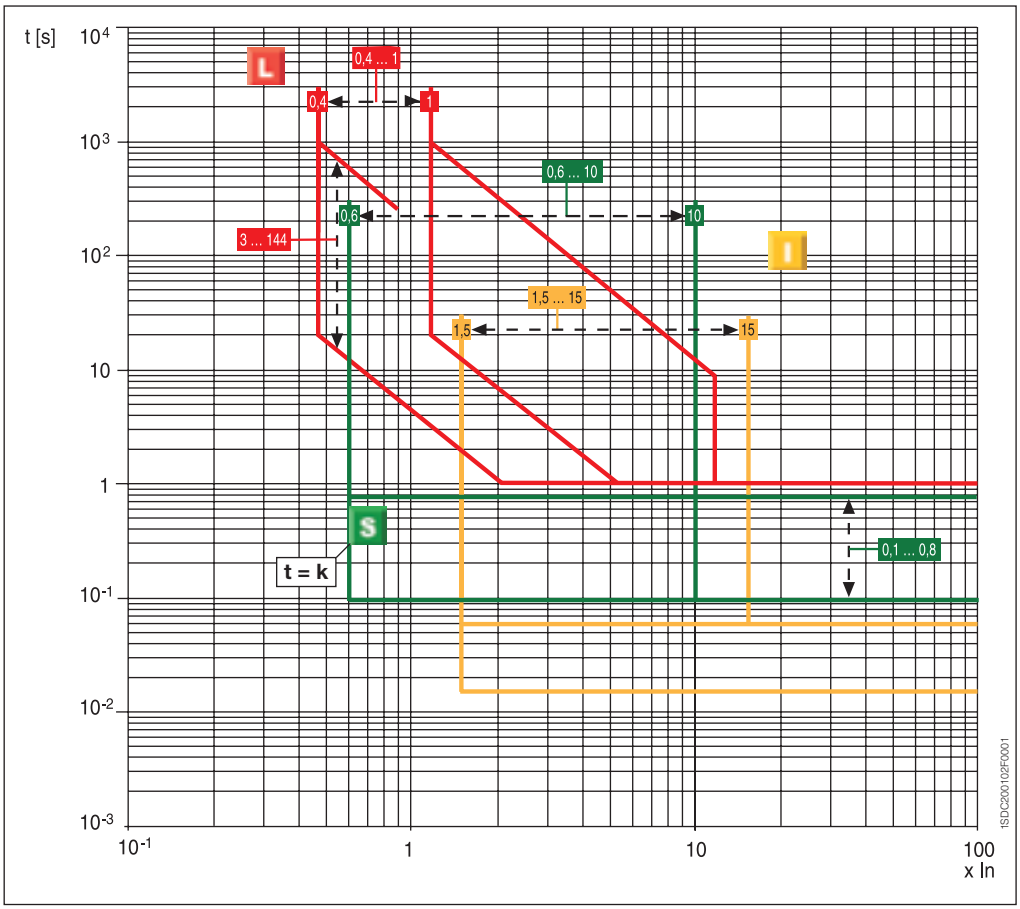

Function G

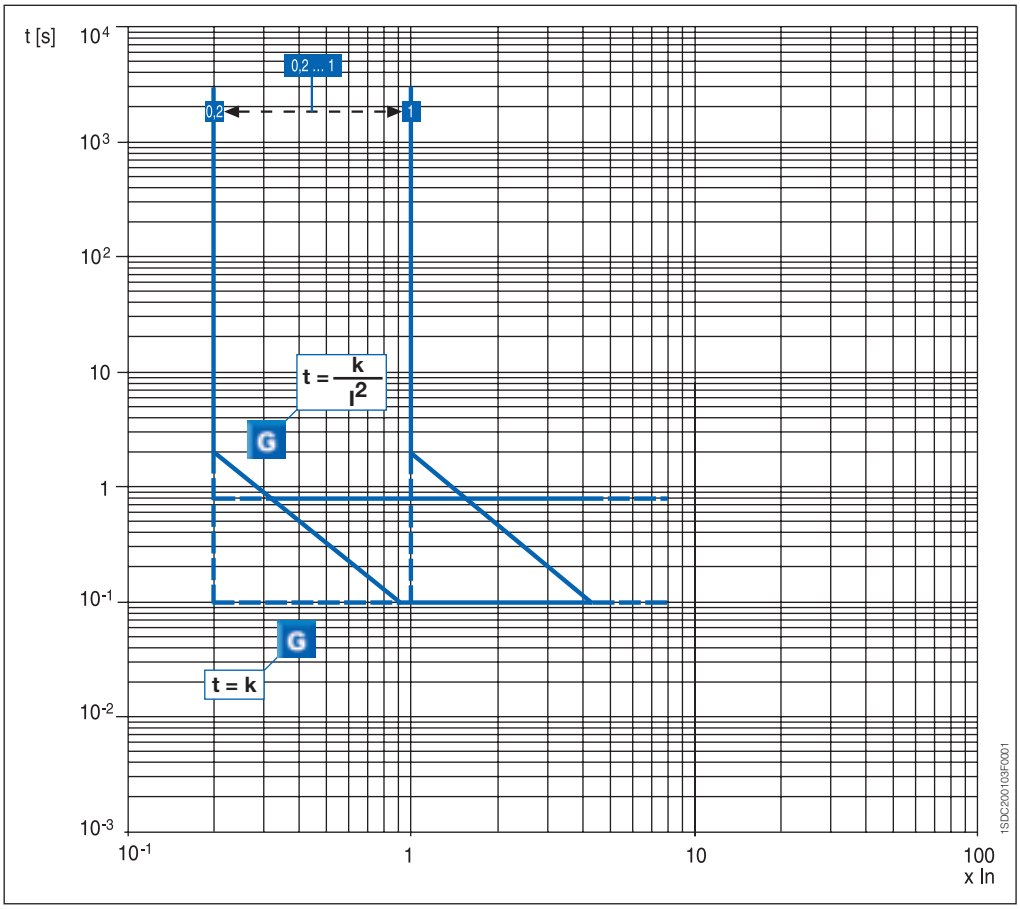

Threshold and trip times tolerances.....page 3/6

Protection trip units and trip curves

PR332/P

Characteristics

The PR332/P trip unit is a sophisticated and flexible protection system based on a state-of-the art microprocessor and DSP technology. Fitted with the optional internal PR330/D-M dialogue unit, PR332/P turns into an intelligent protection, measurement and communication device, based on the Modbus® protocol. By means of the PR330/D-M, PR332/P can also be connected to the ABB EP010 Fieldbus plug adapter, which makes it possible to choose among several different networks, such as Profibus and DeviceNet.

The new PR332/P is the result of ABB SACE's experience in designing protection trip units. The exhaustive range of settings makes this protection unit ideal for general use in any type of installation, from distribution to the protection of motors, transformers, drives and generators.
Access to information and programming using a keyboard and graphic liquid crystal display is extremely simple and intuitive. The interface is common to PR332/P and PR333/P in order to give to the user maximum ease of use. An integrated ammeter and many other additional features are provided over and above the protection functions. These additional functions can be further increased with addition on board of the dialogue, signalling, measurement, and wireless communication units.

Functions S and G can operate with a time delay independent of the current (t = k) or with an inverse time delay (constant specific let-through energy: $I^2t = k$), as required. Protection against earth faults can also be obtained by connecting the PR332/P trip unit to an external toroid located on the conductor that connects the transformer star centre to earth (homopolar toroid).
All the thresholds and trip curve delays of the protection functions are stored in special memories which retain the information even when no power is supplied.

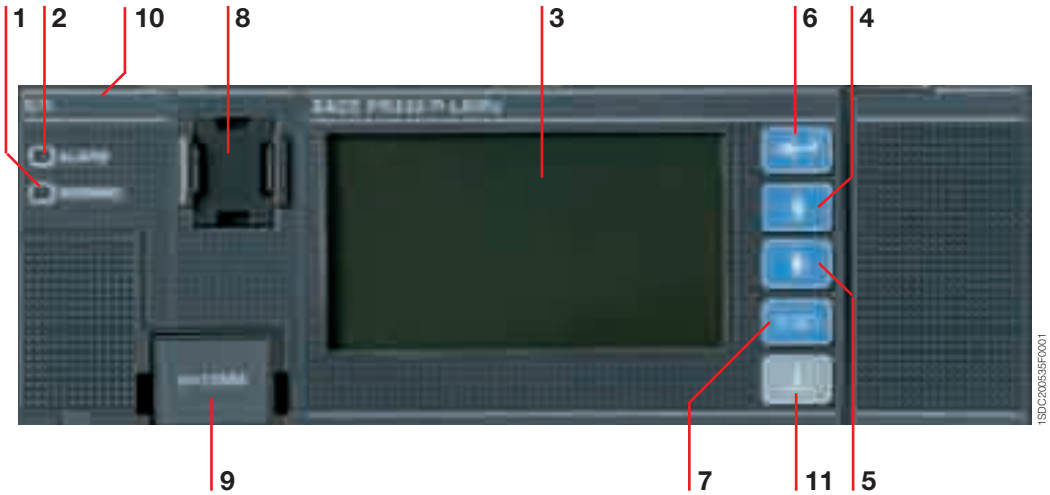

Caption

1 Warning LED
2 Alarm LED
3 Rear-light graphic display
4 Cursor UP button
5 Cursor DOWN button
6 ENTER button to confirm data or change pages
7 Button to exit submenus or cancel operations (ESC)
8 Test connector for connecting or testing the release by means of an external device (PR030/B battery unit, BT030 wireless communication unit and PR010/T unit)
9 Rating plug
10 Serial number of protection trip unit
11 Info-test button

Protection trip units and trip curves

PR332/P

Operation, protection functions and self-test

Basic Protection functions

The PR332/P trip unit offers the following protection functions (according to the version):

- overload (L)
- selective short-circuit (S)
- instantaneous short-circuit (I)
- earth fault (G)
- phase unbalance (U)
- self-protection against overtemperature (OT)
- thermal memory for functions L and S
- zone selectivity for functions S and G
- residual current (Rc) with external toroid (1SDA063869R1)
- source ground return with external sensor (1SDA059145R1)
- closing under short-circuit (MCR)*.

Setting the neutral

In PR332/P, and PR333/P as well, the neutral protection is 50% of the value set for phase protection in the standard version. The neutral protection can be excluded or set to 100%.
In installations where very high harmonics occur, the resulting current at the neutral can be higher than that of the phases. Therefore it is possible to set the neutral protection at 150% or 200% of the value set for the phases. In this case it is necessary to reduce the setting of protection L accordingly.
The table below lists the neutral settings for the various possible combinations between type of circuit-breaker and the threshold I1 setting.

Start-up function

The start-up function allows protections S, I and G to operate with higher trip thresholds during the start-up phase. This avoids untimely tripping caused by the high inrush currents of certain loads (motors, transformers, lamps).
The start-up phase lasts from 100 ms to 30 s, in steps of 0.01 s.
It is automatically recognized by the PR332/P release, when the peak value of the maximum current exceeds the threshold set by the user. A new start-up becomes possible after the current has fallen below the set threshold, if the release is supplied from an external source.

* said protection is available if there is an AUX-MCR contact AUX-MCR (1SDA065235R1)

Adjustable neutral protection settings

	Threshold I1 settings (overload protection)		
Circuit-breaker model	0.4 ≤ I1 ≤ 0.5	0.5 < I1 ≤ 0.66	0.66 < I1 ≤ 1(*)
X1	0-50-100-150-200%	0-50-100-150%	0-50-100%

(*) The setting I1 =1 indicates the maximum overload protection setting. The actual maximum setting allowable must take into account any derating based on temperature, the terminals used and the altitude (see the “Installations” chapter)

Phase unbalance protection U

Protection function U against phase unbalance is used in those situations requiring particularly precise control over missing and/or unbalanced phase currents. With the addition of the PR330/V measuring module, it is possible to determine the unbalance of the phase-to-phase voltages (as an alternative to the phase currents). This function can be excluded.

Protection against overtemperature

The range of PR332/P trip units allows the presence of abnormal temperatures, which could cause temporary or continuous malfunctions of the microprocessor, to be signalled to the user. The user has the following signals or commands available:

– lighting up of the “Warning” LED when the temperature is higher than 70 °C or lower than -20 °C (temperature at which the microprocessor is still able to operate correctly);
– lighting up of the “Alarm” LED when the temperature is higher than 85 °C or lower than -25 °C (temperature above which the microprocessor can no longer guarantee correct operation) and, when decided during the unit configuration stage, simultaneous opening of the circuit-breaker with indication of the trip directly on the display, as for the other protections.

Zone selectivity for protections S and G

Zone selectivity is one of the most advanced methods for making co-ordination of the protections: by using this protection philosophy, it is possible to reduce the trip times of the protection closest to the fault in relation to the times foreseen by time selectivity, of which zone selectivity is an evolution.

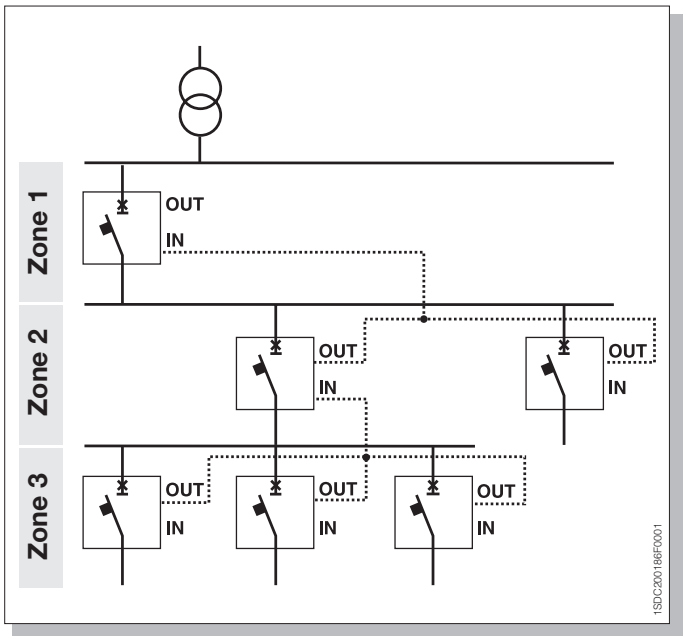

Zone selectivity is applicable to protection functions S and G, even contemporarily and is available as standard on the PR332/P.
The word “zone” is used to refer to the part of an installation between two circuit-breakers in series (see picture beside).
Protection is provided by connecting all of the zone selectivity outputs of the releases belonging to the same zone together and taking this signal to the zone selectivity input of the release immediately to the supply side. Each circuit-breaker that detects a fault communicates this to the circuit-breaker on the supply side using a simple connection wire. Therefore the fault zone is the zone immediately to the load side of the circuit-breaker that detects the fault, but does not receive any communication from those on the load side. This circuit-breaker opens without waiting for the set time-delay.
ABB SACE provides calculation tools to facilitate the work of designers in coordinating protection devices, including the Slide rule kits, DOCWin and CAT software packages and updated coordination charts. The zone selectivity function S and G can be activated or deactivated using the keyboard.

Protection trip units and trip curves

PR332/P

Self-diagnosis

The PR332/P range of trip units contains an electronic circuit which periodically checks the continuity of internal connections (trip coil and each current sensor, including the Source Ground Return when present).
In the case of a malfunction an alarm message appears directly on the display. The Alarm is highlighted by the Alarm LED as well.

Residual Current

Different solutions are available for integrated residual current protection. The basic choice is PR332/P-LSIRc, which has all the characteristics of PR332/P-LSI and residual current protection as well. When additional features are required, the solution is PR332/P-LSIG with an additional PR330/V module (see next paragraph). Using this configuration, residual current protection is added to a unit, having the features of PR332/P-LSI and all the add-ons described for the PR330/V module, such as voltage protection and advanced measurement functions.
Residual current protection acts by measuring the current from the external dedicated toroid.

Test Functions

Once enabled from the menu, the “info/Test” pushbutton on the front of the trip unit allows correct operation of the chain consisting of the microprocessor, trip coil and circuit-breaker tripping mechanism to be checked.
The control menu also includes the option of testing correct operation of the display and signaling LEDs.
By means of the front multi-pin connector it is possible to apply a PR010/T Test unit which allows the functions of the PR331/P, PR332/P and PR333/P ranges of trip units to be tested and checked.

User interface

The human-machine interface (HMI) of the device is made up of a wide graphic display, LEDs, and browsing pushbuttons. The interface is designed to provide maximum simplicity.
The language can be selected from among five available options: Italian, English, German, French and Spanish.
As in the previous generation of releases, a password system is used to manage the “Read” or “Edit” modes. The default password, 0001, can be modified by the user.
The protection parameters (curves and trip thresholds) can be set directly via the HMI of the device. The parameters can only be changed when the release is operating in “Edit” mode, but the information available and the parameter settings can be checked at any time in “Read” mode.
When a communication device (internal PR330/D-M modules or external BT030 device) is connected, it is possible to set parameters simply by downloading them into the unit (over the network for PR330/D-M, by using the SD-Pocket software and a PDA or a notebook for BT030). Parameterisation can then be carried out quickly and automatically in an error-free way by transferring data directly from DocWin.
There is programmable contact in the device, which can be set using PR010/T, SD-TestBus2 or SD Pocket and combined with numerous events.

Indicator LEDs

LEDs on the front panel of the release are used to indicate all the pre-alarms (“WARNING”) and alarms (“ALARM”). A message on the display always explicitly indicates the type of event concerned.
Example of events indicated by the “WARNING” LED:
– unbalance between phases;
– pre-alarm for overload (L1>90%);
– first temperature threshold exceeded (70 °C);
– contact wear beyond 80%;
– phase rotation reversed (with optional PR330/V)

Example of events indicated by the “ALARM” LED:
– overload (may begin from 1.05xI1<I<1.3xI1, in accordance with the standard IEC 60947-2);
– timing of function L;
– timing of function S;
– timing of function G;
– second temperature threshold exceeded (85 °C);
– contact wear 100%;
– timing of Reverse Power flow protection (with optional PR330/V).

Data logger

By default PR332/P, as well as PR333/P, is provided with the Data Logger function, that automatically records in a wide memory buffer the instantaneous values of all the currents and voltages. Data can be easily downloaded from the unit by means of SD-Pocket or SD-TestBus2 applications and can be transferred to any personal computer for elaboration. The dedicated application “SD-Data logger viewer” shows clearly to the user all the relevant trip information provided by the data logger. The function freezes the recording whenever a trip occurs in case of other events, so that a detailed analysis of faults can be easily performed. SD-Pocket and SD-TestBus2 allow also reading and downloading of all the others trip information.
Data logger is also very useful for network analysis in normal operating conditions.

- Number of analog channels: 8
- Maximum sampling rate: 4800 Hz
- Maximum sampling time: 27 s (@ sampling rate 600 Hz)
- 64 events tracking
- 24 V DC auxiliary supply is required for this function.

When communication module PR330/D-M is present, data can be acquired and transferred through the Modbus network.

Trip information and opening data

In case a trip occurs PR332/P and PR333/P store all the needed information:

- Protection tripped
- Opening data (current)
- Time stamp

By pushing the “info/Test” pushbutton the release shows all these data directly on display.
No auxiliary power supply is needed. The information is available to user for 48 hours with the circuit breaker open or without current flowing.
The information of the latest 20 trips are stored in memory.
The information about the last 20 trips remains recorded in the memory and can be recovered by connecting a PR030/B battery unit or a BT030 wireless communication unit or a PR010/T test and configuration unit or an auxiliary power supply.

Load control

Load control makes it possible to engage/disengage individual loads on the load side before the overload protection L is tripped, thereby avoiding unnecessary trips of the circuit-breaker on the supply side. This is done by means of contactors or relays (externally wired to the release), controlled by the PR332/P through the contacts of an external unit.
The current thresholds and trip times are smaller than those available for selection with protection L, so that load control can be used to prevent overload tripping.
An external accessory unit is required for Load Control. The function is only active when an auxiliary power supply is available.

Protection trip units and trip curves

PR332/P

Measurement function

The current measurement function (ammeter) is present on all versions of the PR332/P unit.
The display shows histograms showing the currents of the three phases and neutral on the main page. Furthermore, the most loaded phase current is indicated in numerical format. Earth fault current, where applicable, is shown on a dedicated page.
The latter current value takes on two different meanings depending on whether the external toroidal transformer for the “Source Ground Return” function or the internal transformer (residual type) is connected.
The ammeter can operate either with self-supply or with an auxiliary power supply voltage. The display is rear-lit and the ammeter is active even at current levels lower than 160A.
Accuracy of the ammeter measurement chain (current sensor plus ammeter) is no more than 1.5% in the current interval of 0.3 - 6 In.

– Currents: three phases (L1, L2, L3), neutral (Ne) and earth fault;
– Instantaneous values of currents during a period of time (data logger);
– Maintenance: number of operations, percentage of contact wear, opening data storage (last 20 trips and 80 events).

When the optional PR330/V is connected (see the accessory section) the following additional measurement function are present:

– Voltage: phase-phase, phase-neutral and residual voltage;
– Instantaneous values of voltages during a period of time (data logger);
– Power: active, reactive and apparent;
– Power factor;
– Frequency and peak factor;
– Energy: active, reactive, apparent, counter.

3

Versions available

The following versions are available:

PR332/P LI-LSI-LSIG-LSIRc

Protection functions and setting values - PR332/P

Function		Trip threshold	Threshold step	Trip time *	Time Step	Poss. excl.	Relation t=f(I)	Thermal memory	Zone selectivity
L	Overload protection	I1= 0.4….1 x In	0.01 x In	With If = 3xI1 t1= 3 s....144 s (1)	3 s	–	t=k/I²	■	–
	Tolerance (2)	Trip between 1.05 ... 1.2 x I1		± 10% If ≤ 6 x In ± 20% If > 6 x In					
		I1= 0.4….1 x In	0.01 x In	With If = 3xI1; t1= 3 s....144 s	3 s	–	t=t (α)	–	–
	Tolerance	1.05 ... 1.2 x I1 (in accordance with IEC 60255-3)		± 20% If > 6 x I1 ± 30% 2xI1≤ If ≤ 6 x I1 In			α=0.02-1-2		
S	Selective short-circuit protection	I2= 0.6….10 x In	0.1 x In	With If > I2 t2= 0.05 s….0.8 s (2) t2sel= 0.04 s….0.25 s	0.01 s 0.01 s	■	t=k	–	■
	Tolerance (2)	± 7% If ≤ 6 x In ± 10% If > 6 x In		The best of the two data: ± 10% o ± 40 ms					
		I2= 0.6….10 x In	0.1 x In	With If = 10 x In t2= 0.05 s….0.8 s	0.01 s	■	t=k/I²	■	–
	Tolerance (2)	± 7% If ≤ 6 x In ± 10% If > 6 x In		± 15% If ≤ 6 x In ± 20% If > 6 x In					
I	Instantaneous short-circuit protection	I3= 1.5….15 x In	0.1 x In	≤ 30 ms	–	■	t=k	–	–
	Tolerance (2)	± 10%							
G	Earth fault protection	I4= 0.2….1 x In	0.02 x In	With If > I4 t4= 0.1 s…..1 s t4sel= 0.04 s….0.25 s	0.05 s 0.05 s	■	t=k	–	■
	Tolerance (2)	± 7%		The best of the two data: ± 10% o ± 40 ms					
		I4= 0.2….1 x In	0.02 x In	t4= 0.1 s…..1 s	0.05 s	■	t=k/I²	–	–
	Tolerance (2)	± 7%		± 15%					
Rc	Residual Current protection	Id= 3-5-7-10-20-30 A		td= 0.06-0.1-0.2-0.3-0.4-0.5-0.8 s (3)	–	■	t=k	–	–
	Tolerance (2)	± 0 - 20%							
MCR	Protection against closing under short-circuit	I3= 6.0 - 6.1 - 6.2 - 6.3 - 6.4 . . . 14.5 - 14.6 - 14.7 - 14.8 - 14.9 - 15 x In		≤ 30 ms	–	■	t=k	–	–
	Tolerance (2)	± 10%							
OT	Protection against overtemperature	fixed defined by ABB	–	Instantaneous	–	–	temp=k	–	–
U	Phase unbalance protection	I6= 2%….90%	1%	t6= 0.5 s…..60 s	0.5 s	■	t=k	–	–
	Tolerance (2)	± 10%		The best of the two data: ± 20% o ± 100 ms					

* Referring to the electronics
If = fault current
(1) The minimum trip value is 1 s, regardless of the type of curve set (self-protection)
(2) These tolerances are valid in the following conditions:
- self-supplied release at full power and/or auxiliary power supply (without start-up)
- two- or three-phase power supply
- trip time set ≥ 100 ms

(3) No intervention time

The following tolerance values apply in all cases not covered by the above:

	Trip time
L	± 20%
S	± 20%
I	≤ 60ms
G	± 20%
Others	± 20%

3

Protection trip units and trip curves

PR332/P

Additional Protection functions and setting values - PR332/P with PR330/V

Function		Trip threshold	Threshold steps	Trip Time *	Time Step	Poss. excl.	Relation t=f(I)	Thermal memory	Zone selectivity
UV	Undervoltage protection Tolerance (1)	U8= 0.5….0.95 x Un ± 5%	0.01 x Un	With U < U8 t8= 0.1 s....5 s The better of the two figures: ± 20% or ± 100 ms	0.1 s	■	t=k	–	–
OV	Overvoltage protection Tolerance (1)	U9= 1.05….1.2 x Un ± 5%	0.01 x Un	With U > U9 t9= 0.1 s....5 s The better of the two figures: ± 20% or ± 100 ms	0.1 s	■	t=k	–	–
RV	Residual voltage protection Tolerance (1)	U10= 0.1….0.4 x Un ± 5%	0.05 x Un	With U > U10 t10= 0.5 s....30 s The better of the two figures: ± 10% or ± 100 ms	0.5 s	■	t=k	–	–
RP	Reverse power protection Tolerance (1)	P11= -0.3….-0.1 x Pn ± 10%	0.02 x Pn	With P < P11 t11= 0.5 s....25 s The better of the two figures: ± 10% or ± 100 ms	0.1 s	■	t=k	–	–
UF	Underfrequency protection Tolerance (1)	f12= 0.90….0.99 x fn ± 5%	0.01 x fn	With f < f12 t9= 0.5 s....3 s The better of the two figures: ± 10% or ± 100 ms	0.1 s	■	t=k	–	–
OF	Overfrequency protection Tolerance (1)	f13= 1.01….1.10 x fn ± 5%	0.01 x fn	With f > f13 t10= 0.5 s....3 s The better of the two figures: ± 10% or ± 100 ms	0.1 s	■	t=k	–	–

* Referring to the electronics
(1) These tolerances are valid in the following conditions:
- self-supplied release at full power and/or auxiliary power supply (without start-up)
- two- or three-phase power supply
- trip time set ≥ 100 ms

Power supply

The PR332/P trip unit does not normally require any external power supplies, being self-supplied from the current sensors (CS): to activate the protection and ammeter functions, it is sufficient for three phases to have a current load at least at 70 A.
The unit ensures fully self-supplied operation. When an auxiliary power supply is present, it is also possible to use the unit with the circuit-breaker either open or closed with very low current flowing through.
It is also possible to use an auxiliary power supply provided by the PR030/B portable battery unit (always supplied), which allows the protection functions to be set when the trip unit is not self supplied.
PR332/P stores and shows all the information needed after a trip (protection tripped, trip current, time, date). No auxiliary supply is required for this functionality.

	PR332/P	PR330/D-M
Auxiliary power supply (galvanically insulated)	24 V DC ± 20%	from PR332/P
Maximum ripple	5%	
Inrush current @ 24V	~1 A for 5 ms	
Rated power @ 24V	~3 W	+1 W

(*) PR330/V can give power supply to the trip unit when a three phase voltage is equal or higher to 60V.

Functions L-I

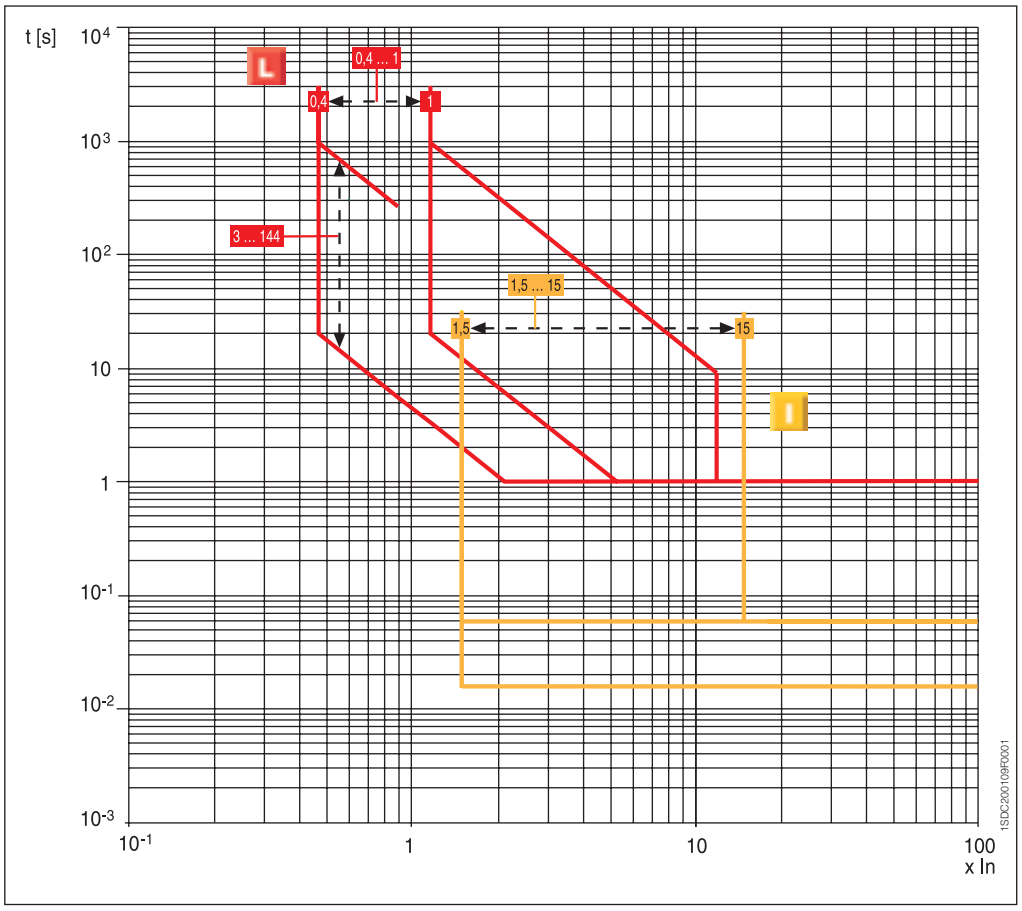

Functions L-S-I

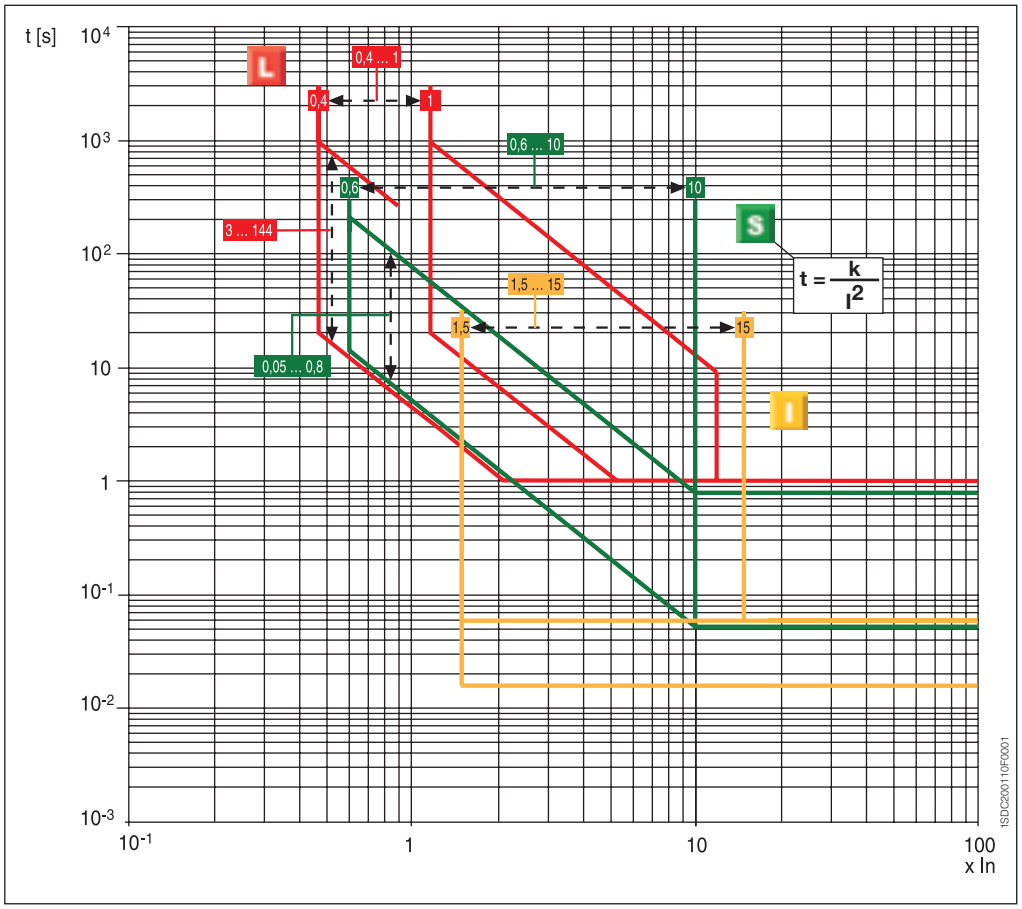

Threshold and trip times tolerances.....page 3/15

Protection trip units and trip curves

PR332/P

Functions L-S-I

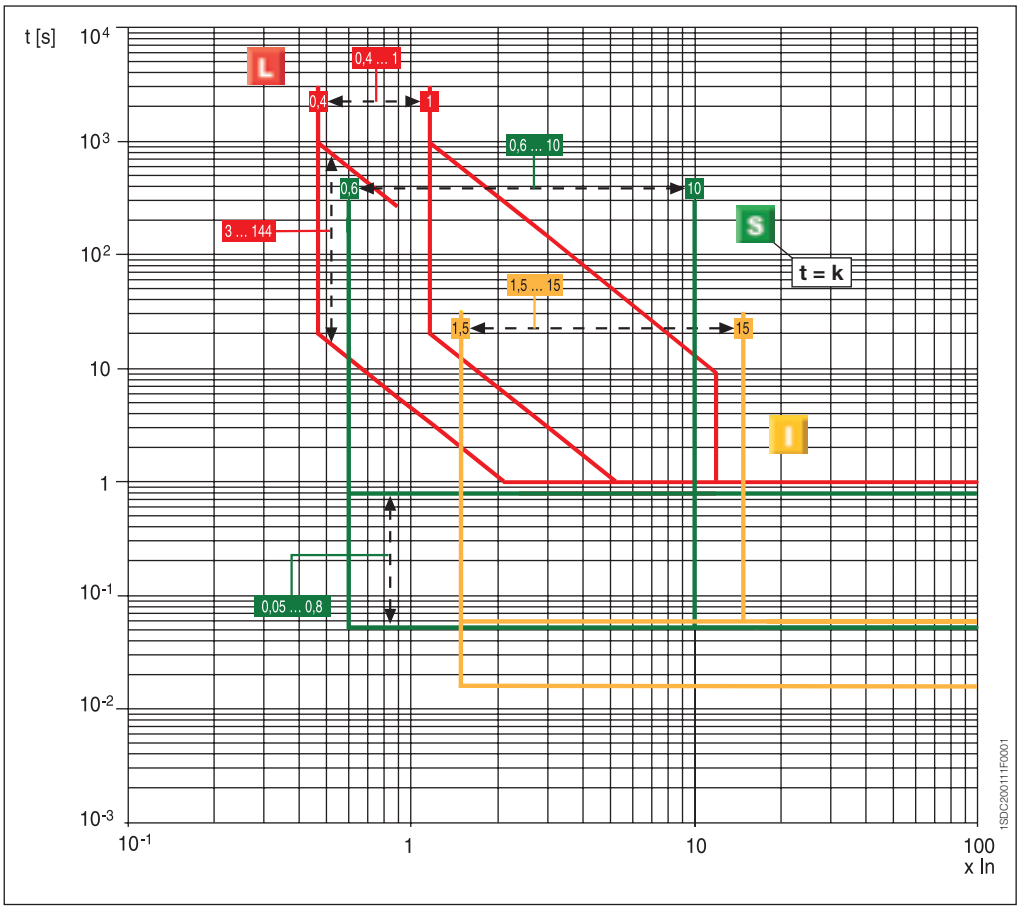

Function G

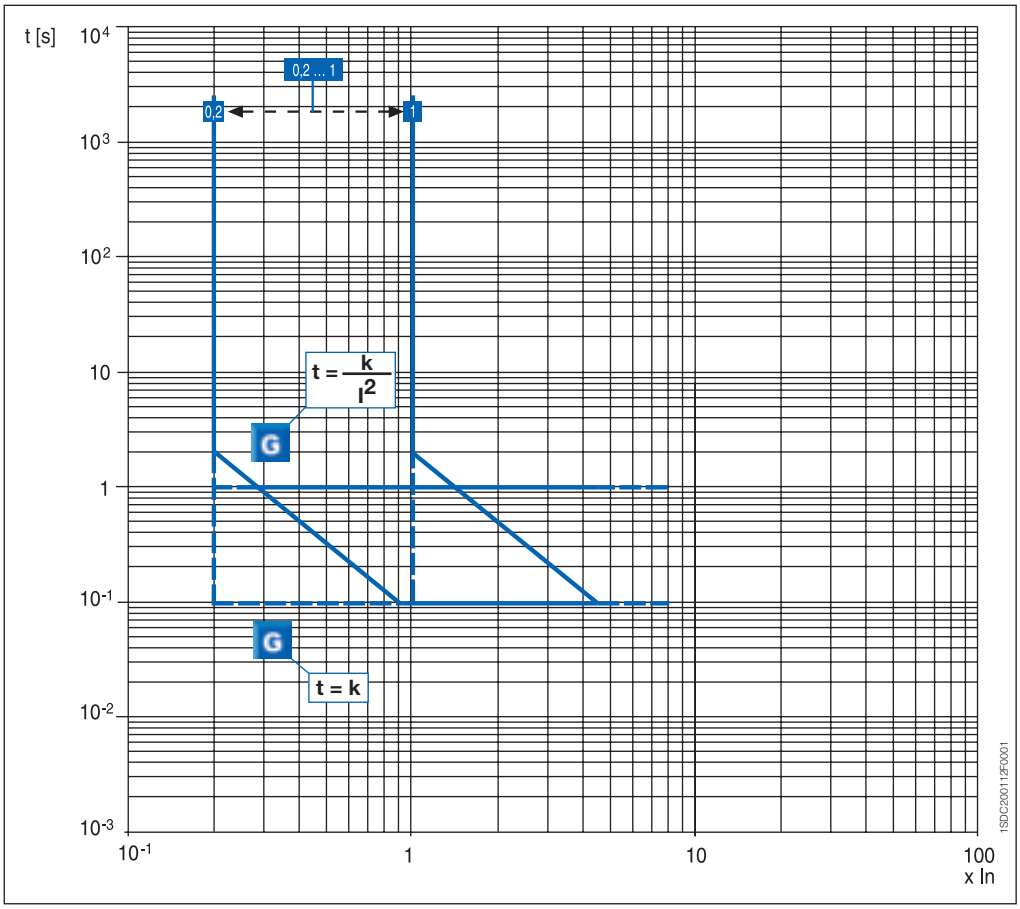

Threshold and trip times tolerances.....page 3/15

Function L

According to IEC 60255-3

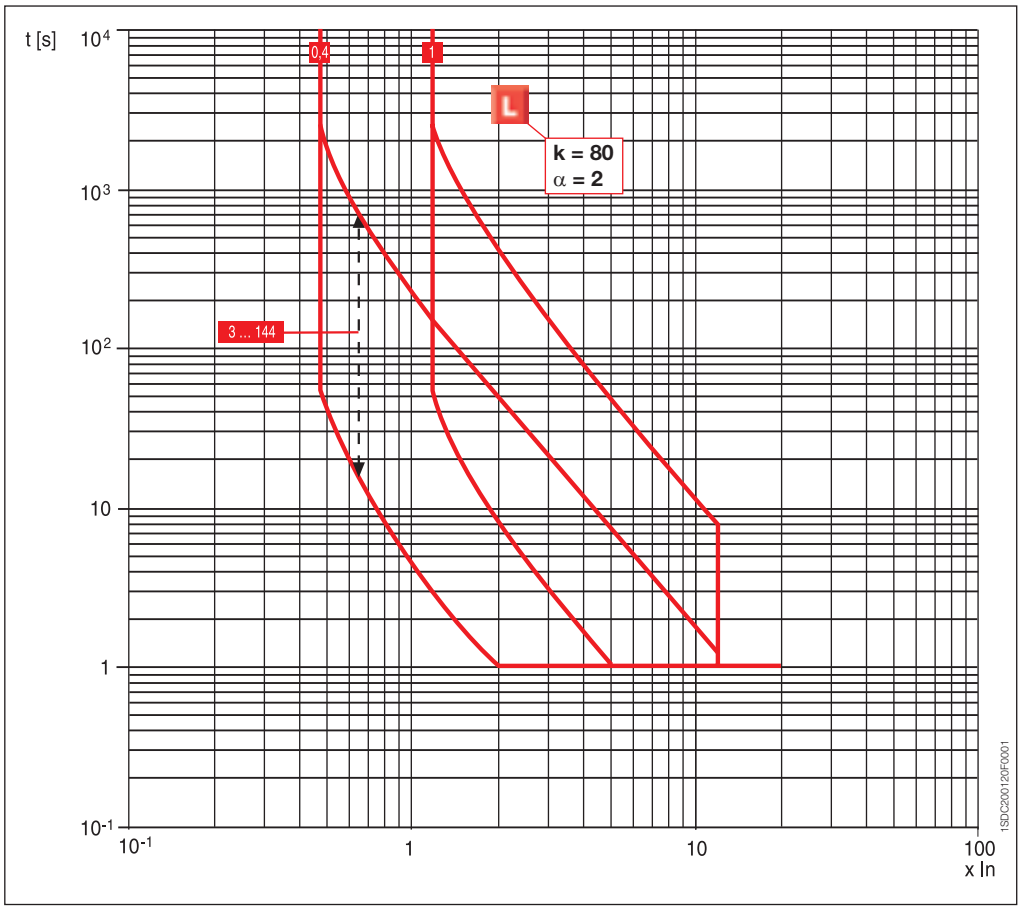

Function L

According to IEC 60255-3

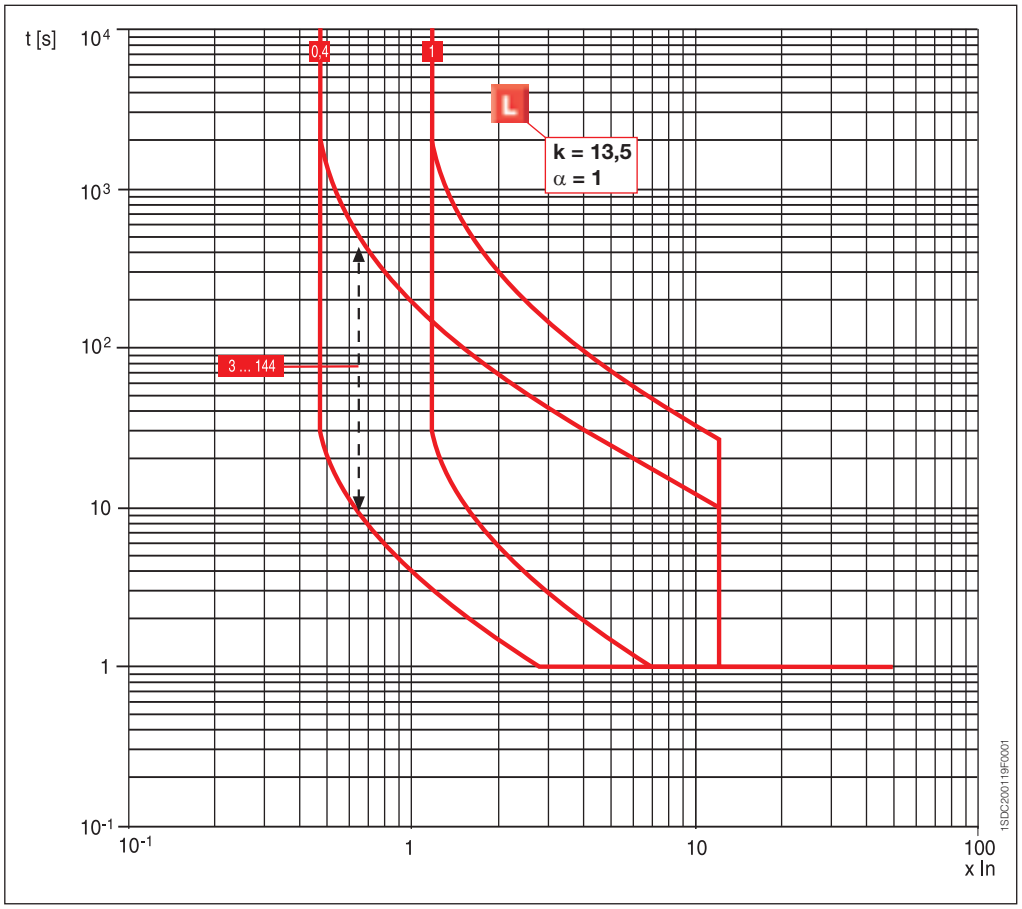

Threshold and trip times tolerances.....page 3/15

Protection trip units and trip curves

PR332/P

Function L

According to IEC 60255-3

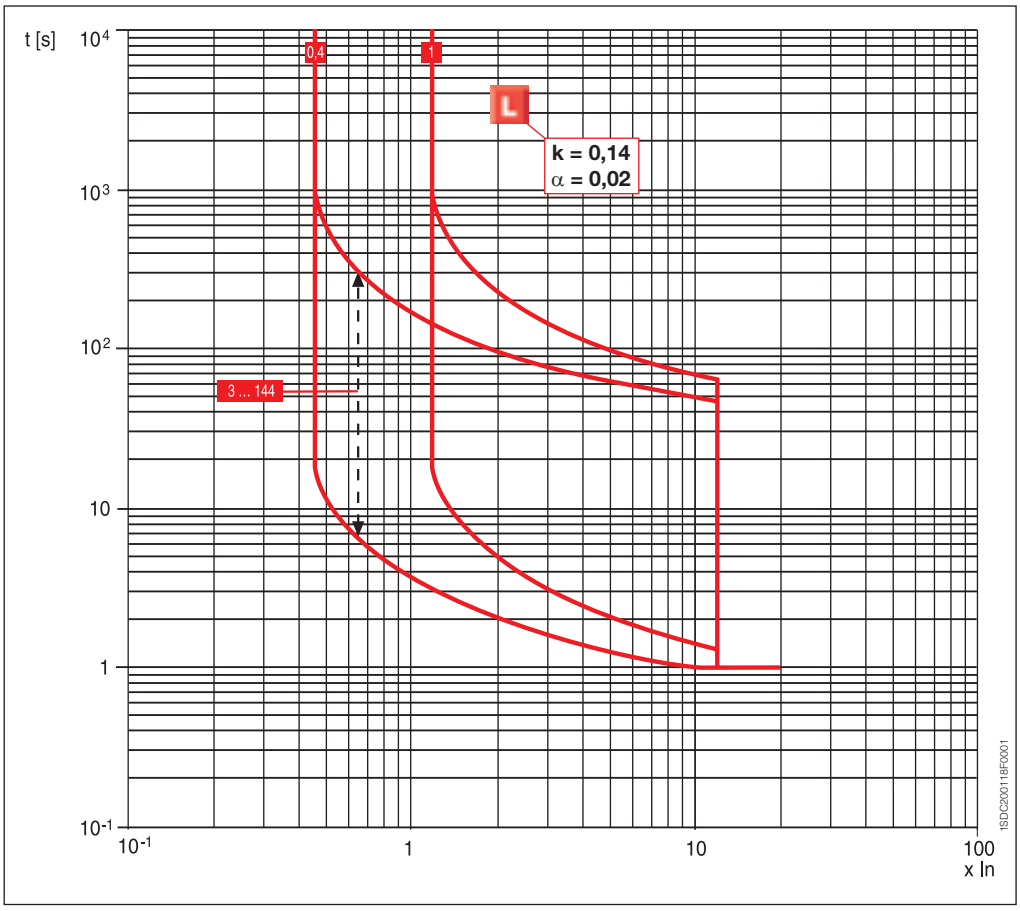

Function U

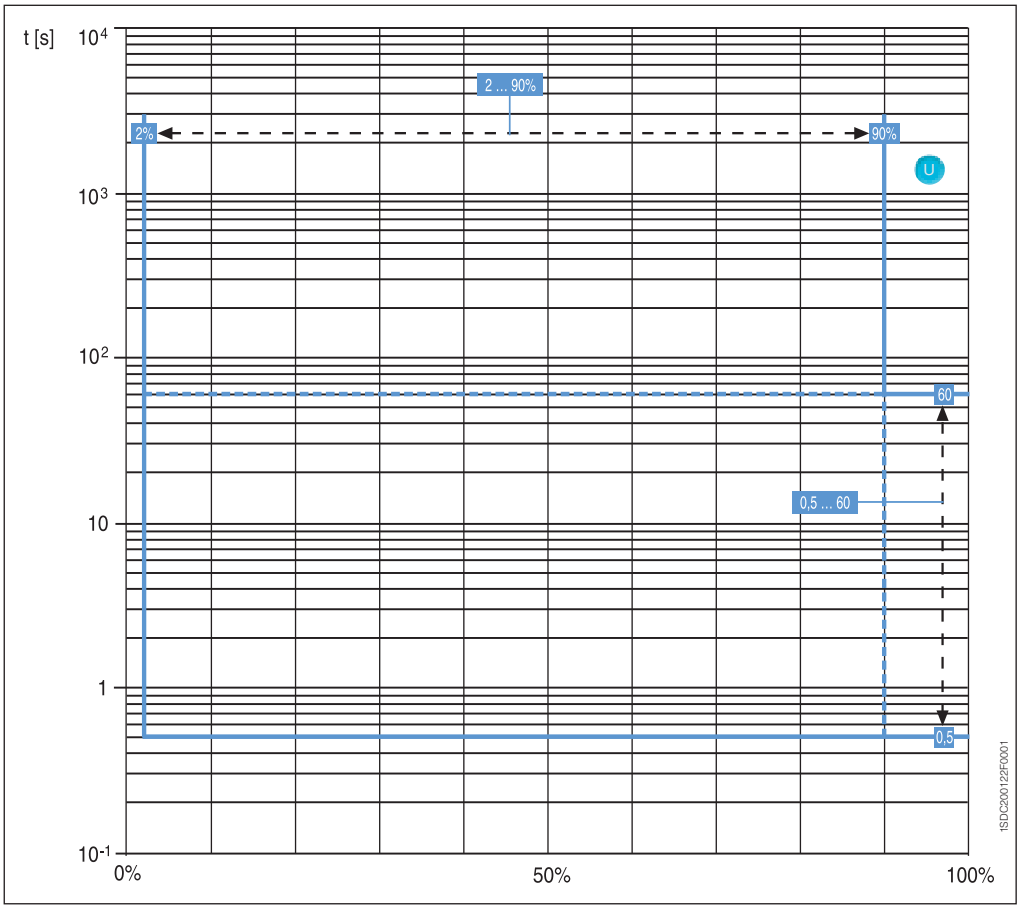

Threshold and trip times tolerances.....page 3/15

Function UV

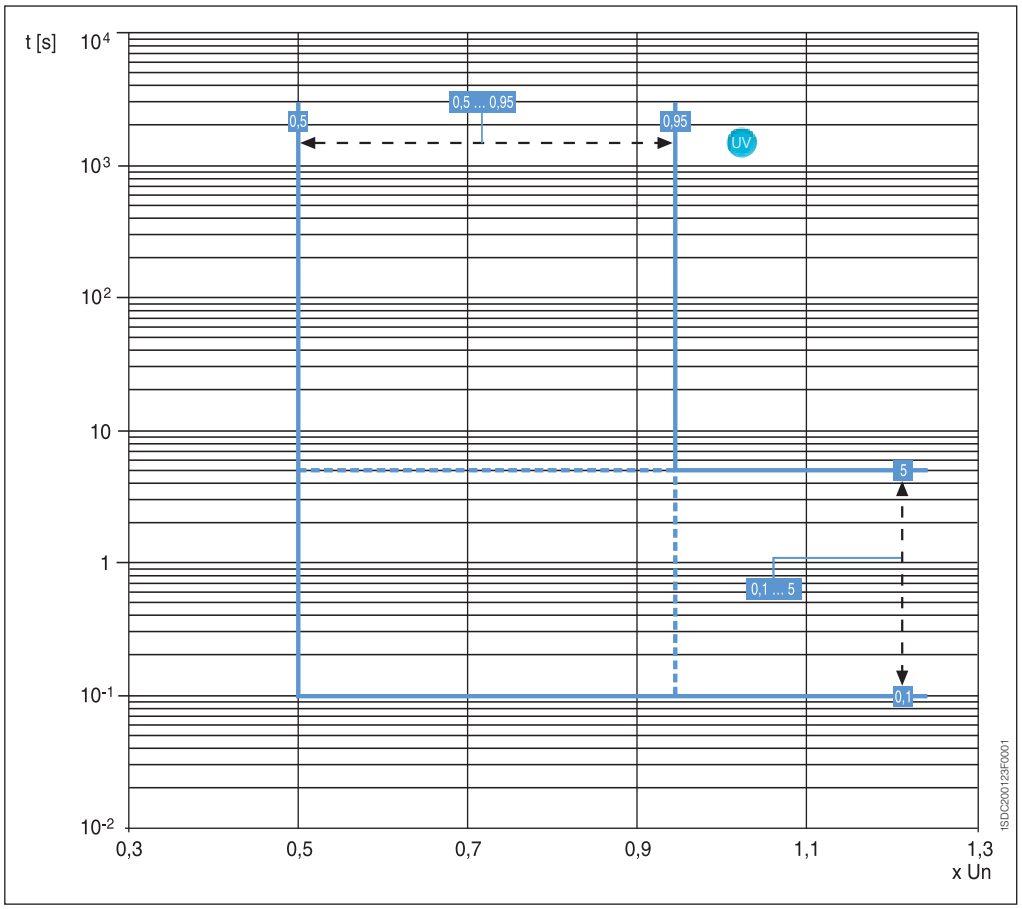

Function OV

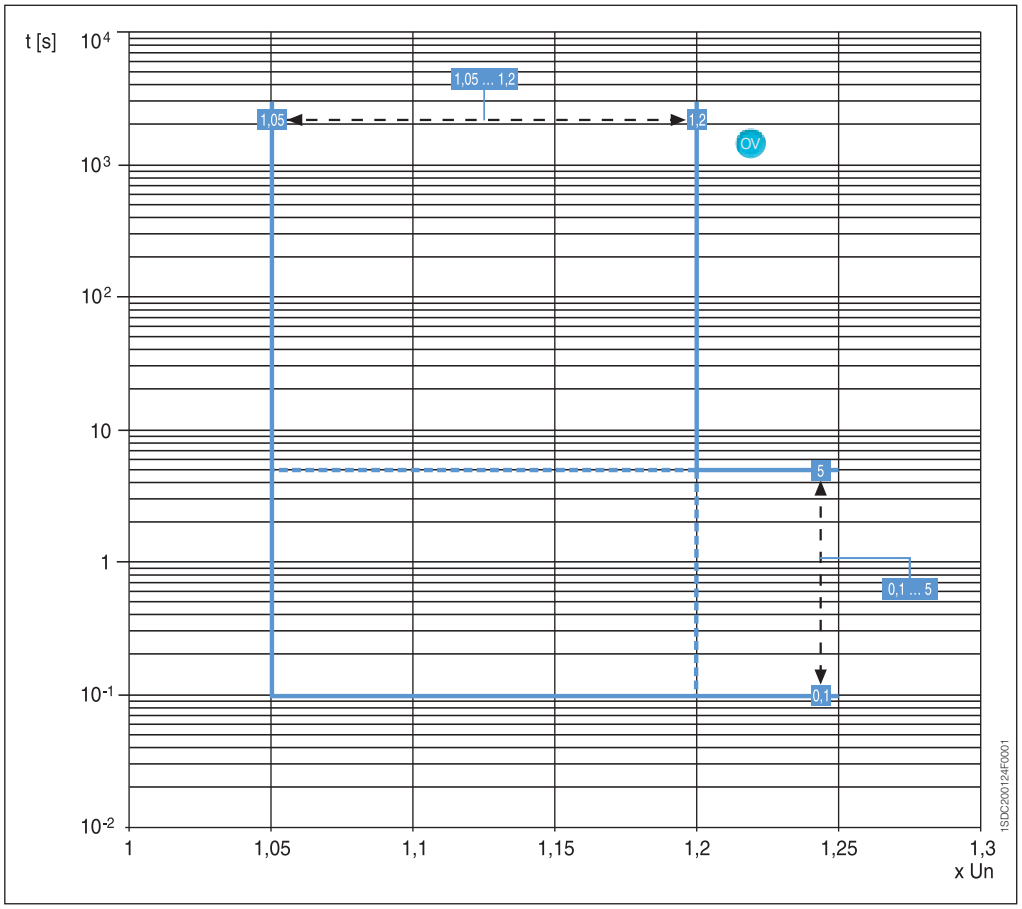

Threshold and trip times tolerances.....page 3/15

Protection trip units and trip curves

PR332/P

Function RV

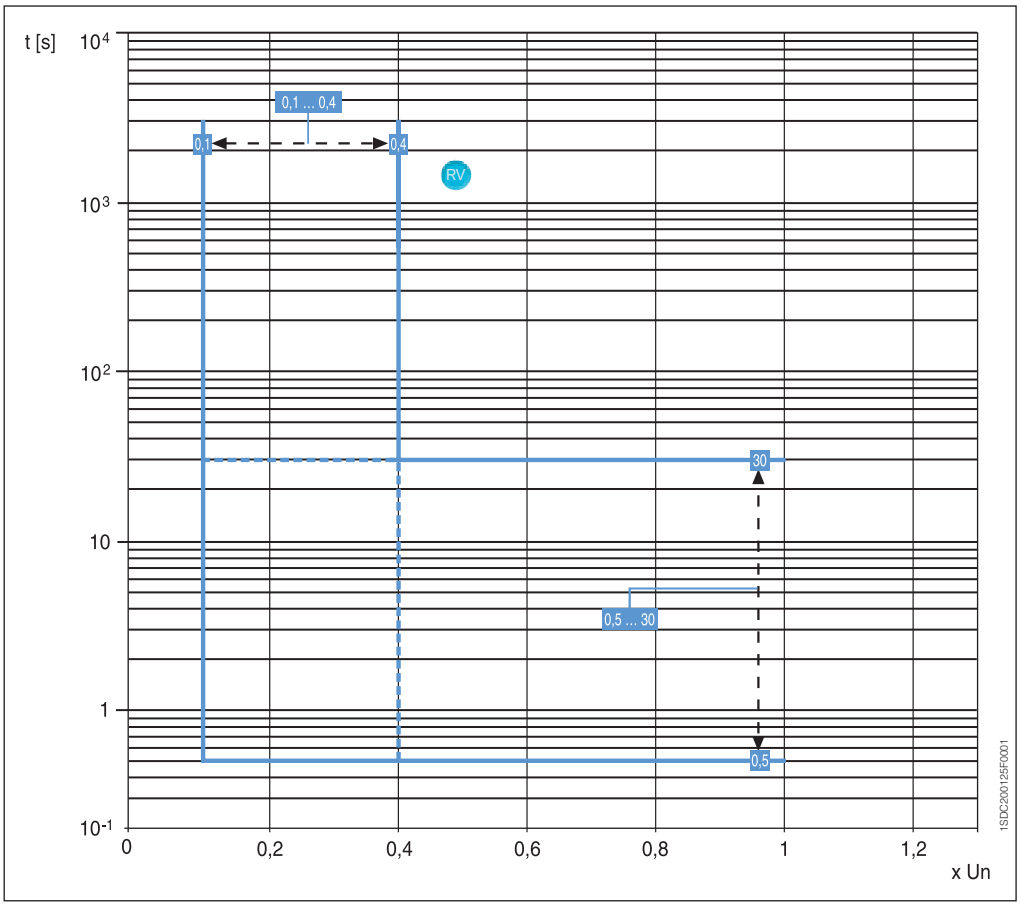

Function RP

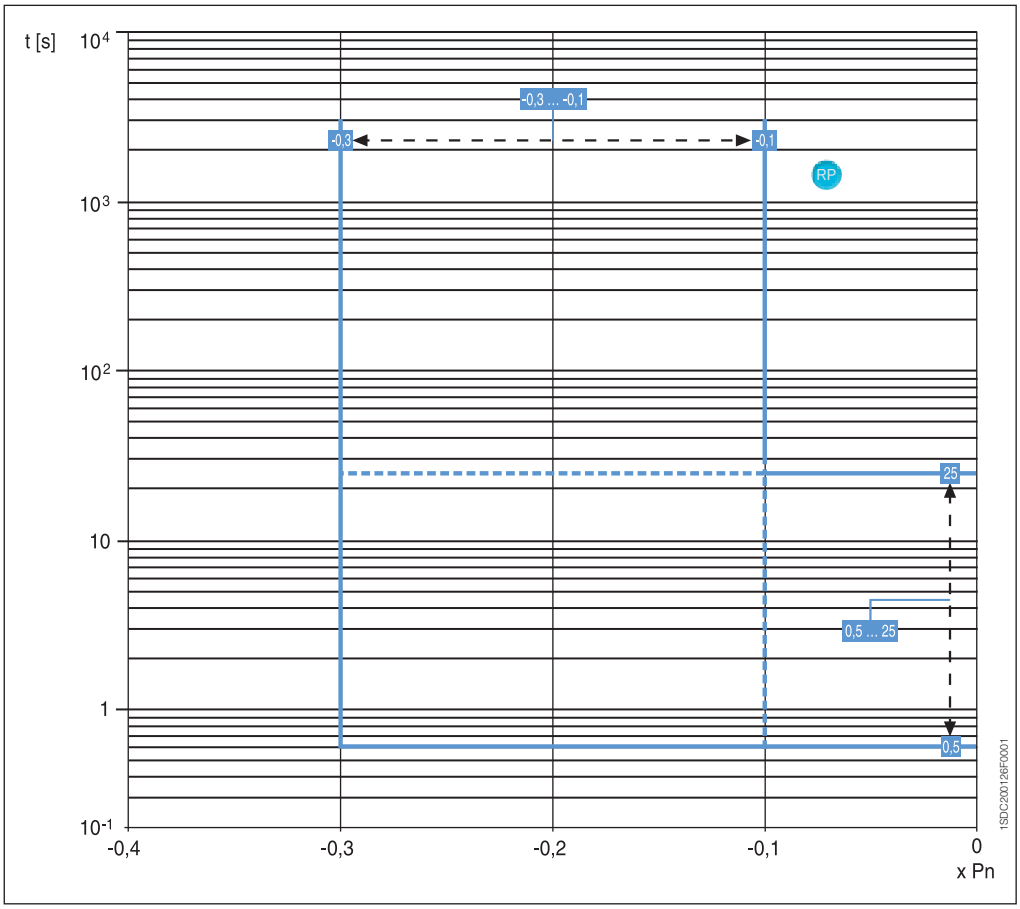

Threshold and trip times tolerances.....page 3/15

Protection trip units and trip curves

PR333/P

Characteristics

The PR333/P protection trip unit completes the range of releases available for the Emax X1 family of circuit-breakers.

It is a high-performance and extraordinarily versatile release, capable of offering a complete set of functions for protection, measurement, signalling, data storage and control of the circuit-breaker, and it represents the benchmark in low voltage protection units for circuit-breakers. The front interface of the unit, common to PR332/P, is extremely simple thanks to the aid of the liquid crystal graphics display. It can show diagrams, bar graphs, measurements and sine curves for the various electrical values.

PR333/P integrates all the features offered by PR332/P plus a series of evolute functionalitie. As well as PR332/P it can be integrated with the additional features provided by internal modules and external accessories.

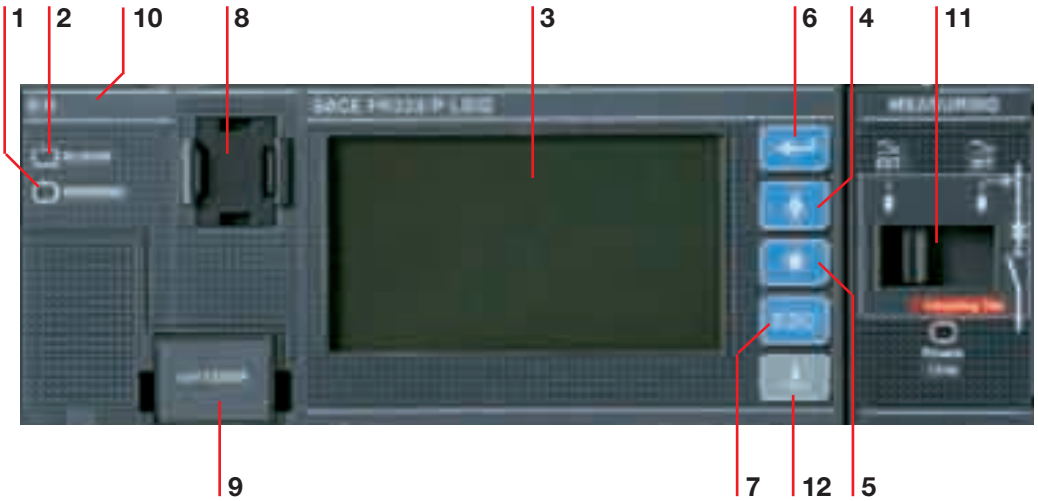

Caption

1 Warning LED
2 Alarm LED
3 Rear-lit graphic display
4 Cursor UP button
5 Cursor DOWN button
6 ENTER button to confirm data or change pages
7 Button to exit submenus or cancel operations (ESC)
8 Test connector for connecting or testing the trip unit by means of an external device (PR030/B battery unit, BT030 wireless communication unit and PR010/T unit)
9 Rating plug
10 Serial number of protection trip unit
11 Switch-disconnector for insulating tests, internal connection or connection to terminal box (external)
12 Info-test button

Protection trip units and trip curves

PR333/P

Protection functions

The PR333/P trip unit offers the following protection functions:
- overload (L),
- selective short-circuit (S),
- instantaneous short-circuit (I),
- earth fault with adjustable delay (G),
- protection against closing under short-circuit (MCR)*,
- directional short-circuit with adjustable delay (D),
- phase unbalance (U),
- protection against overtemperature (OT),
- load control (K),
- undervoltage (UV),
- overvoltage (OV),
- residual voltage (RV),
- reverse power (RP),
- underfrequency (UF),
- overfrequency (OF),
- phase sequence (alarm only),
- residual current (Rc) with external toroidal transformer (1SDA063869R1) and dedicated Rating Plug,
- Source Ground Return with external sensor (1SDA059145R1).

* said protection is available if there is an AUX-MCR contact AUX-MCR (1SDA065235R1)

In addition to PR332/P features, the following improvements are available:

Double selective short-circuit protection S

In addition to the standard S protection, PR333/P makes contemporarily available a second time-constant S protection (excludible) that allows two thresholds to be set independently achieving an accurate selectivity even under highly critical conditions.

Double earth fault protection G

While in PR332/P the user must choose among the implementation of G protection through internal current sensors (calculating the vectorial sum of currents) or external toroid (direct earth fault current measuring), PR333/P offers the exclusive feature of the contemporaneous management of both the configuration, by means of two independent earth fault protections curves. The main application of this characteristic is simultaneous activation of restricted and unrestricted earth fault protection. See chapter 6 for details.

Directional short-circuit protection with adjustable delay D

The protection works in a similar way to the fixed-time protection “S”, with the added ability to recognize the direction of the phases current during the fault period. The current direction makes it possible to determine whether the fault is on the supply or load side of the circuit-breaker. Particularly in ring distribution systems, this makes it possible to identify and disconnect the distribution segment where the fault has occurred, whilst keeping the rest of the installation running. If multiple PR332/P or PR333/P trip units are used, this protection can be associated with zone selectivity.

Dual setting of protections

PR333/P can store an alternative set of all the protection parameters. This second set (set B) can replace, when needed, the default set (set A) by means of an external command. The command can be given typically when network configuration is modified, like when a parallel of incoming lines is closed or when an emergency source is present in the system, changing load capability and short-circuit levels.
The set B can be activated by:
– communication network, through PR330/D-M (i.e. when the changeover is scheduled);
– directly from user interface of PR333/P;
– an adjustable time internal after closing of the circuit-breaker.

Zone selectivity function

The zone selectivity function allows the fault area to be insulated by segregating the system very rapidly only at the level closest to the fault, while leaving the rest of the installation running.
This is done by connecting the releases together: the release nearest the fault is tripped instantly, sending a block signal to the other releases affected by the same fault. The zone selectivity function can be enabled if the fixed-time curve has been selected and an auxiliary power supply is present. Zone selectivity can be applied with protections S and G or, alternatively, with protection D.

Measurement functions

The PR333/P release provides a complete set of measurements:
– Currents: three phases (L1, L2, L3), neutral (Ne) and earth fault
– Voltage: phase-phase, phase-neutral and residual voltage
– Power: active, reactive and apparent
– Power factor
– Frequency and peak factor, (Ip/Irms)
– Energy: active, reactive, apparent, counter
– Harmonics calculation: up to the 40th harmonic for frequency f = 50 Hz (waveform and module of the harmonics displayed); up to the 35th for frequency f = 60Hz
– Maintenance: number of operations, percentage of contact wear, opening data storage.

The PR333/P unit is able to provide the pattern of measurements for some values over an adjustable period of time P, such as: mean active power, maximum active power, maximum current, maximum voltage and minimum voltage. The last 24 P periods (adjustable from 5 to 120 min.) are stored in a non-volatile memory and displayed in a bar graph.

Other Functions

PR333/P integrates all the features (in terms of protection, measurement, signaling and communication) described for PR332/P equipped with PR330/V.
The device also contains a programmable contact that can be set using the PR010/T, SD-TestBus2 or SD-Pocket, and combined with numerous events.

Protection trip units and trip curves

PR333/P

Protection functions and setting values - PR333/P

Function		Trip threshold	Threshold steps	Trip Time *	Time Step	Can be excluded	Relation t=f(I)	Thermal memory	Zone selectivity
L	Overload protection Tolerance (2)	I1= 0.4….1 x In Trip between 1.05 e 1.2 x I1	0.01 x In	With If = 3xI1 t1= 3 s....144 s ± 10% If ≤ 6 x In ± 20% If > 6 x In	3 s (1)	–	$t=k/I^2$	■	–
	Tolerance	I1= 0.4….1 x In 1.1 ... 1.25 x I1 (in accordance with IEC 60255-3)	0.01 x In	With If = 3xI1; t1= 3 s....144 s ± 20% If > 6 x I1 ± 30% 2xI1≤ If ≤ 6 x I1 In	3 s	–	t=k (α) α=0.02-1-2	–	–
S	Selective short-circuit protection Tolerance (2)	I2= 0.6….10 x In ± 7% If ≤ 6 x In ± 10% If > 6 x In	0.1 x In	With If > I2 t2= 0.05 s….0.8 s The best of the two data: ± 10% o ± 40 ms	0.01s	■	t=k	–	■
	Tolerance (2)	I2= 0.6….10 x In ± 7% If ≤ 6 x In ± 10% If > 6 x In	0.1 x In	With If = 10xIn; t2= 0.05 s…0.8 s ± 15% If ≤ 4 x In ± 20% If > 4 x In	0.01s	■	$t=k/I^2$	■	–
S_2	Selective short-circuit protection Tolerance (2)	I2= 0.6….10 x In ± 7% If ≤ 6 x In ± 10% If > 6 x In	0.1 x In	With If > I2 t2= 0.05 s….0.8 s The best of the two data: ± 10% o ± 40 ms	0.01s	■	t=k	–	■
I	Instantaneous short-circuit protection Tolerance (2)	I3= 1.5….15 x In ± 10%	0.1 x In	≤ 30 ms	–	■	t=k	–	–
G	Earth fault protection Tolerance (2)	I4= 0.2….1 x In ± 7%	0.02 x In	With If > I4 t4= 0.1 s…..1 s The best of the two data: ± 10% o ± 40 ms	0.05 s	■	t=k	–	■
	Tolerance (2)	I4= 0.2….1 x In ± 7%	0.02 x In	t4= 0.1 s…..1 s ± 15%	0.05 s	■	$t=k/I^2$	–	–
Rc	Residual Current protection Tolerance (2)	Id= 3-5-7-10-20-30 A ± 0-20%		td= 0.06-0.1-0.2-0.3-0.4-0.5-0.8 s (3)	–	■	t=k	–	–
MCR	Protection against closing in short circuit conditions Tolerance (2)	I3= 6.0-6.1-6.2-6.3-6.4….14.5-14.6-14.7-14.8-14.9-15 x In ± 10%		≤ 30 ms	–	■	t=k	–	–
D	Directional short-circuit protection Tolerance (2)	I7= 0.6….10 x In ± 10%	0.1 x In	With If > I7 t7= 0.20 s…..0.8 s ± 20%	0.01 s	■	t=k	–	■
U	Phase unbalance protection Tolerance (2)	I6= 2%….90% ± 10%	1%	t6= 0.5 s…..60 s The best of the two data: ± 20% o ± 100 ms	0.5 s	■	t=k	–	–
OT	Protection against overtemperature	fixed defined by ABB	–	Instantaneous	–	–	temp=k	–	–
UV	Undervoltage protection Tolerance (2)	U8= 0.5….0.95 x Un ± 5%	0.01 x In	With U < U8; t8= 0.1 s….5 s The best of the two data: ± 20% o ± 100 ms	0.1 s	■	t=k	–	–
OV	Overvoltage protection Tolerance (2)	U9= 1.05….1.2 x Un ± 5%	0.01 x In	With U > U9; t9= 0.1 s….5 s The best of the two data: ± 20% o ± 100 ms	0.1 s	■	t=k	–	–
RV	Residual voltage protection Tolerance (2)	U10= 0.1….0.4 x Un ± 5%	0.05 Un	With U > U10; t10= 0.5 s….30 s The best of the two data: ± 10% o ± 100 ms	0.5 s	■	t=k	–	–
RP	Reverse power protection Tolerance (2)	P11= -0.3….-0.1 x Pn ± 10%	0.02 Pn	With P < P11 t11= 0.5 s…..25 s The best of the two data: ± 10% o ± 100 ms	0.1 s	■	t=k	–	–
UF	Underfrequency protection Tolerance (2)	f11 = 0.90….0.99 x fn ± 5%	0.01 fn	With f < f12; t9= 0.5 s….3 s The best of the two data: ± 10% o ± 100 ms	0.1 s	■	t=k	–	–
OF	Overfrequency protection Tolerance (2)	f12 = 1.01….1.10 x fn ± 5%	0.01 fn	With f > f13; t10= 0.5 s….3 s The best of the two data: ± 10% o ± 100 ms	0.1 s	■	t=k	–	–

* Referring to the electronics
If = fault current
(1) The minimum trip value is 1 s, regardless of the type of curve set (self-protection)
(2) These tolerances hold in the following conditions:
- self-powered relay at full power and/or auxiliary power supply (without start-up)
- two- or three-phase power supply
- trip time set ≥ 100 ms
(3) No intervention time

The following tolerance values apply in all cases not covered by the above:

	Trip time
L	± 20%
S	± 20%
I	≤ 60ms
G	± 20%
Others	± 20%

Power supply

The PR333/P trip unit does not normally require any external power supplies, being self-supplied from the current sensors (CS): to activate the protection and ammeter functions, it is sufficient for the three phases to have a current load at least at 70 A.
The unit ensures fully self-supplied operation. When an auxiliary power supply is present, it is also possible to use the unit with the circuit-breaker either open or closed with very low current flowing through.
It is also possible to use an auxiliary power supply provided by the PR030/B portable battery unit (always supplied), which allows the protection functions to be set when the release is not self supplied.
PR333/P stores and shows all the information needed after a trip (protection tripped, trip current, time, date). No auxiliary supply is required for this functionality.

	PR333/P	PR330/D-M
Auxiliary power supply (galvanically insulated)	24 V DC ± 20%	from PR333/P
Maximum ripple	5%	
Inrush current @ 24V	~1 A per 5 ms	
Rated power @ 24V	~3 W	+1 W

PR330/V can give power supply to the release when a three-phase voltage is equal or higher to 60V.

Protection trip units and trip curves

PR333/P

Functions L-S-I

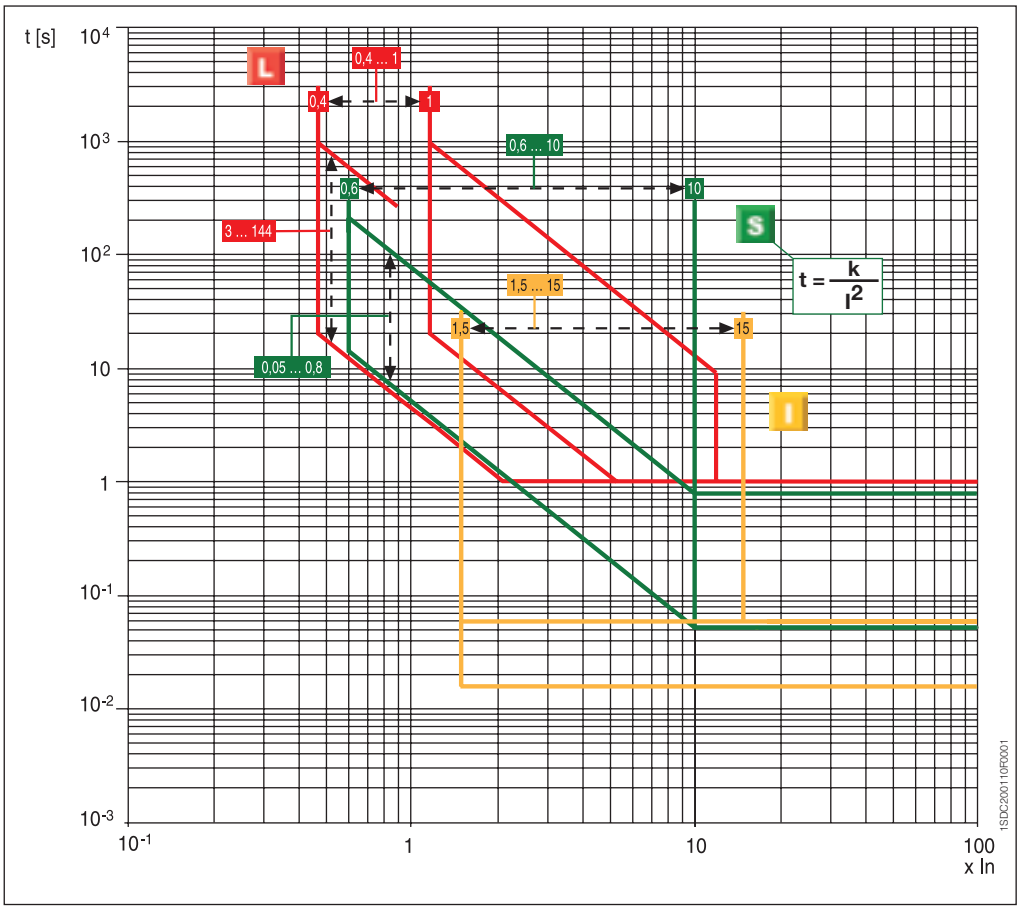

Functions L-S-I

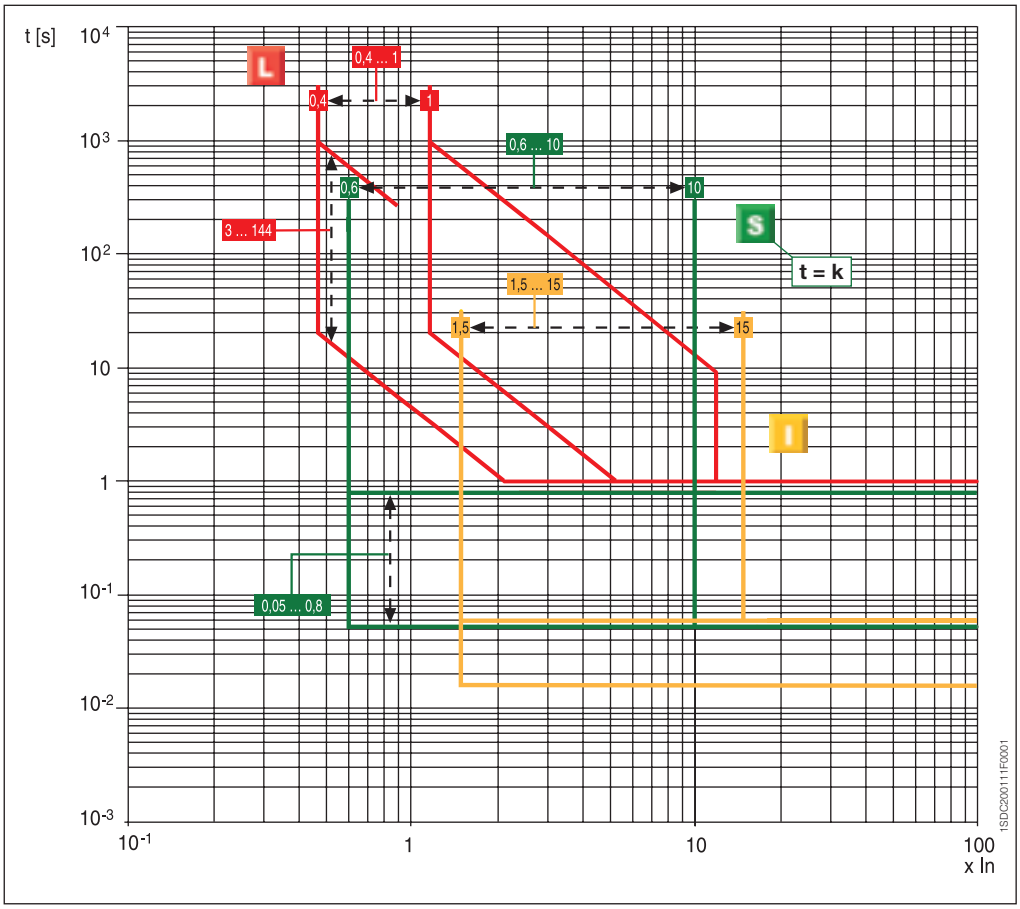

Threshold and trip times tolerances.....page 3/26

Function G

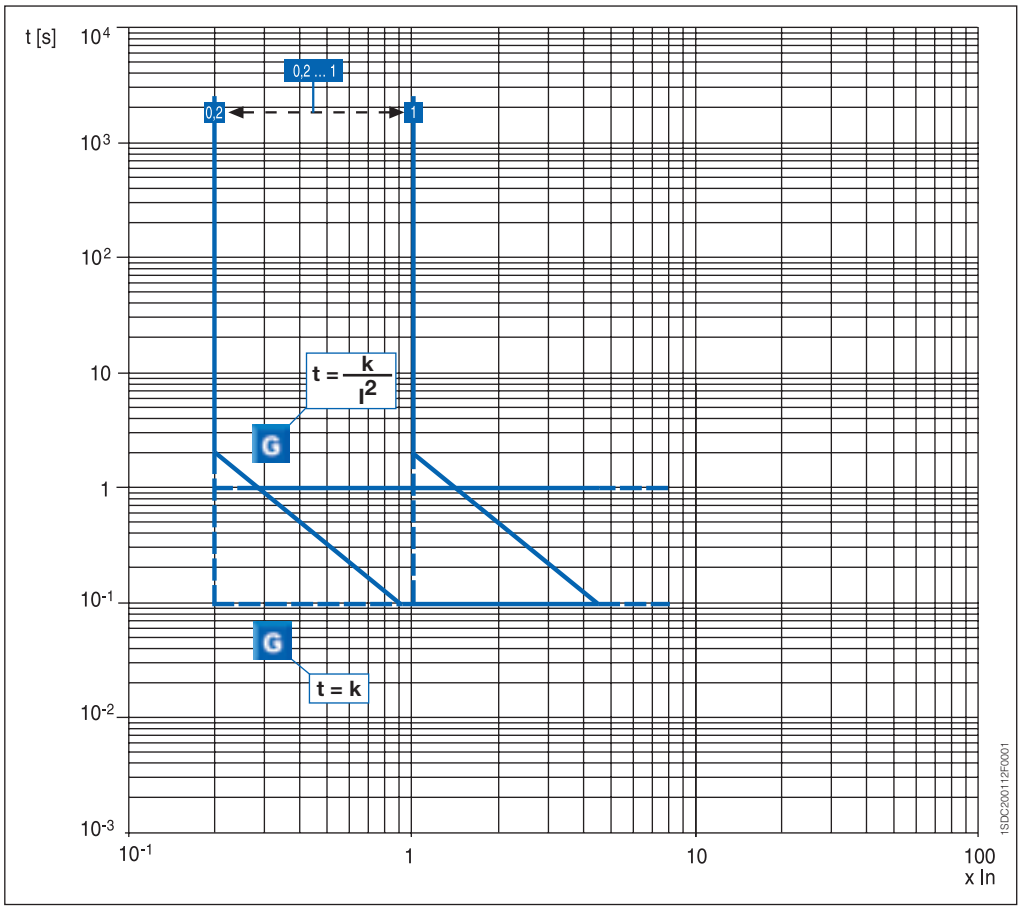

Function L

According to IEC 60255-3

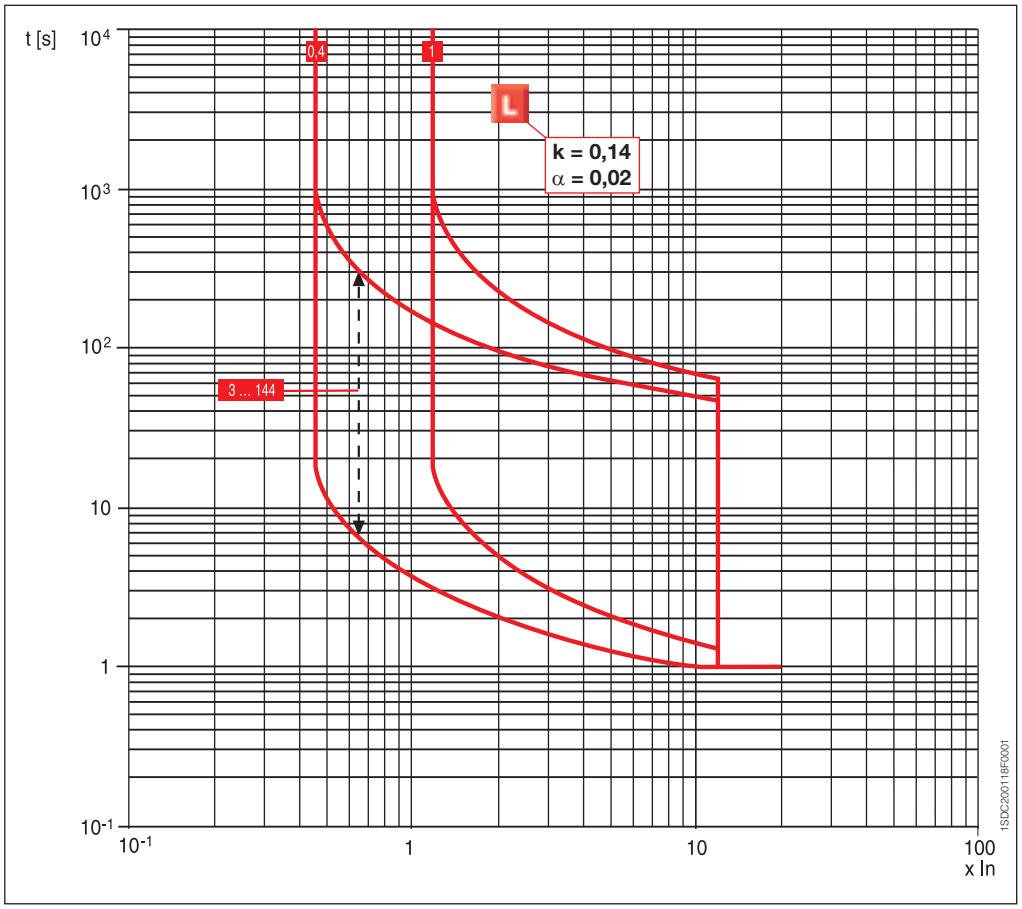

Threshold and trip times tolerances.....page 3/26

Protection trip units and trip curves

PR333/P

Function L

According to IEC 60255-3

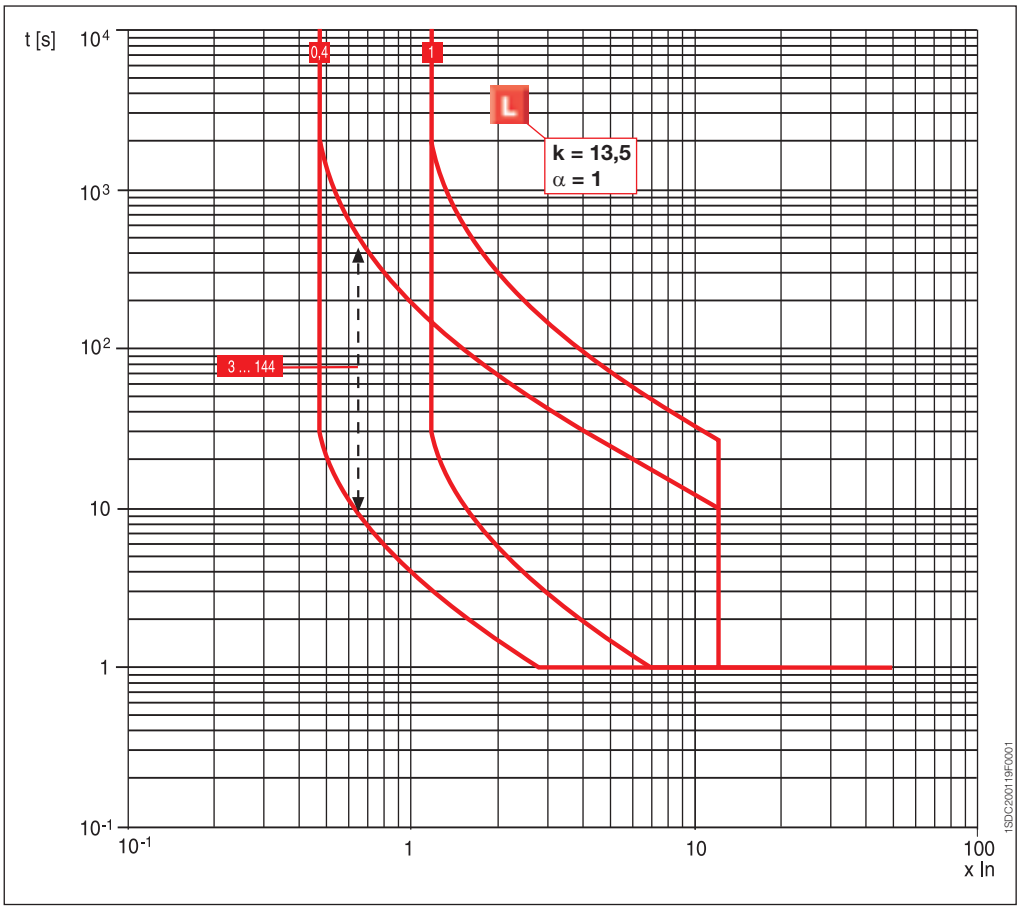

Function L

According to IEC 60255-3

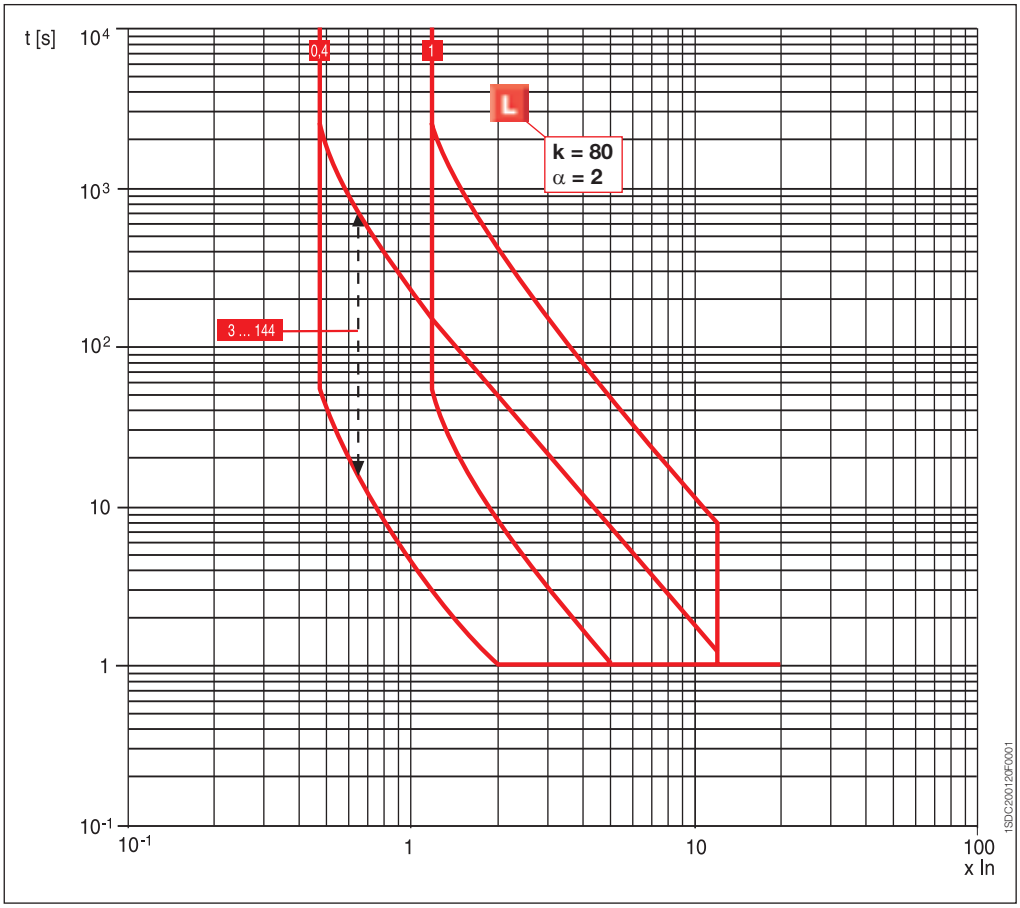

Threshold and trip times tolerances.....page 3/26

Function D

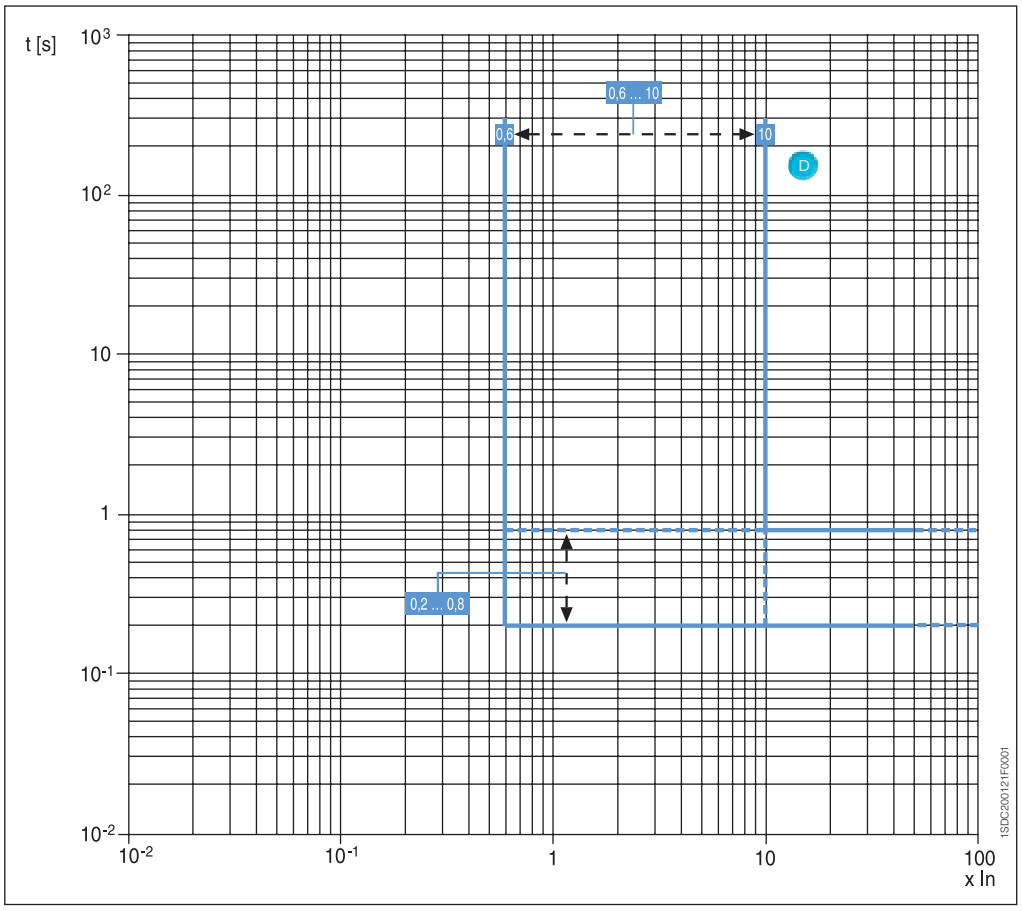

Function U

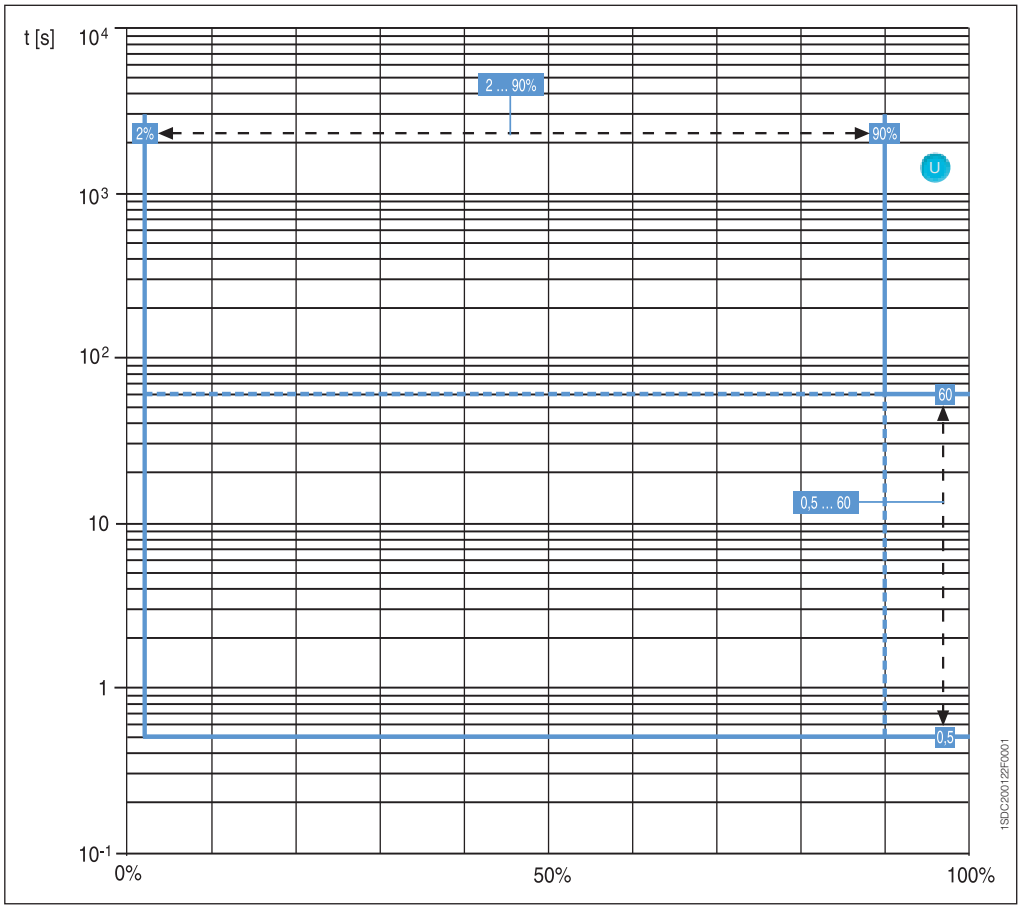

Threshold and trip times tolerances.....page 3/26

Protection trip units and trip curves

PR333/P

Function UV

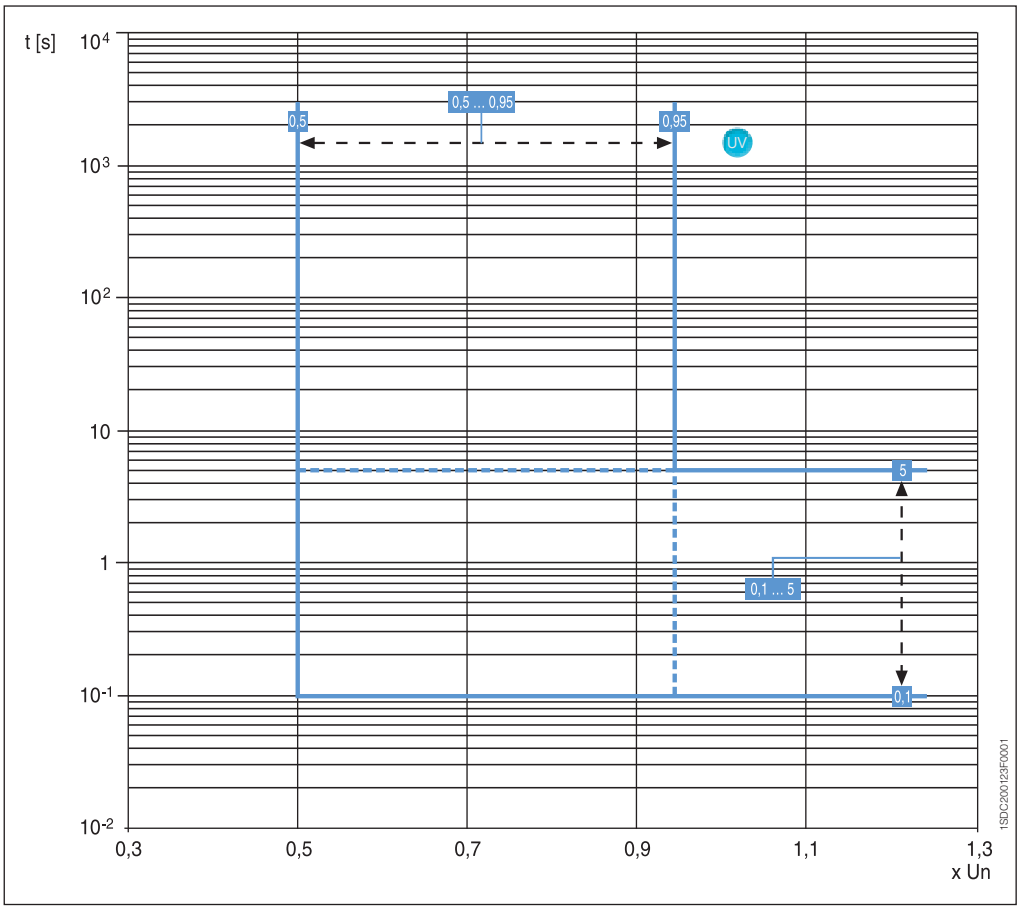

Function OV

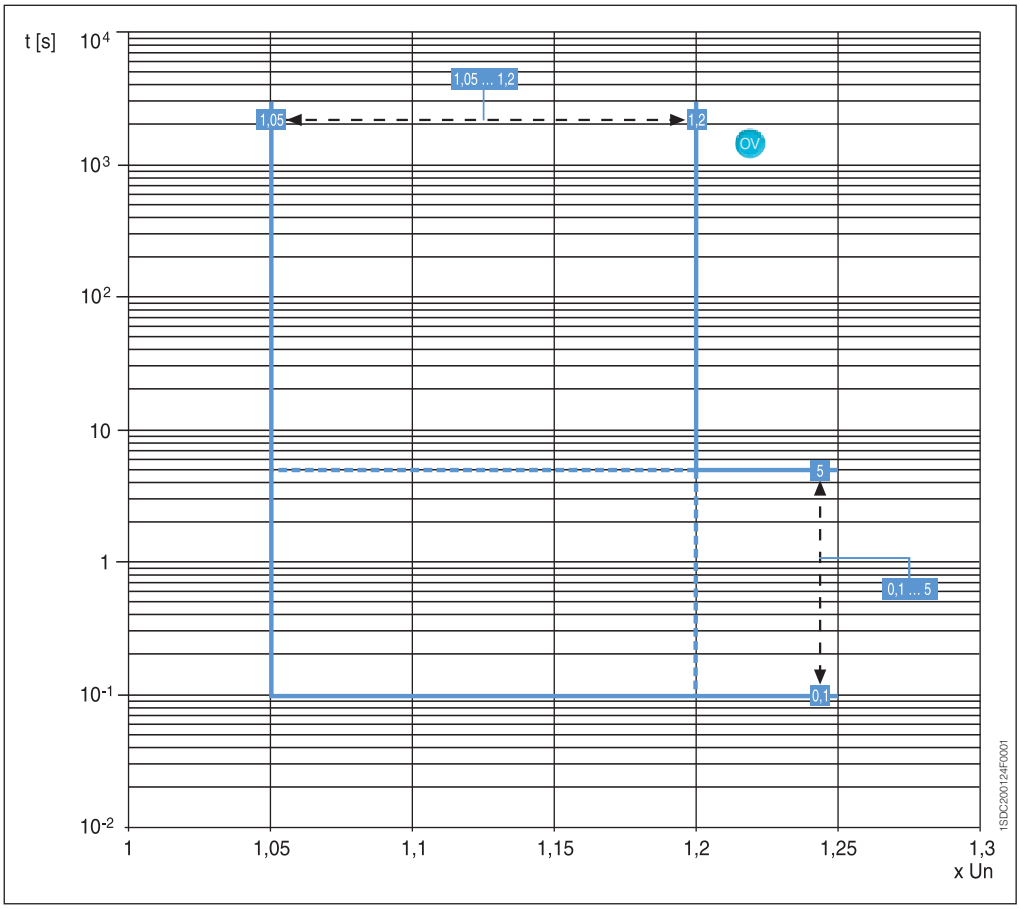

Threshold and trip times tolerances.....page 3/26

Function RV

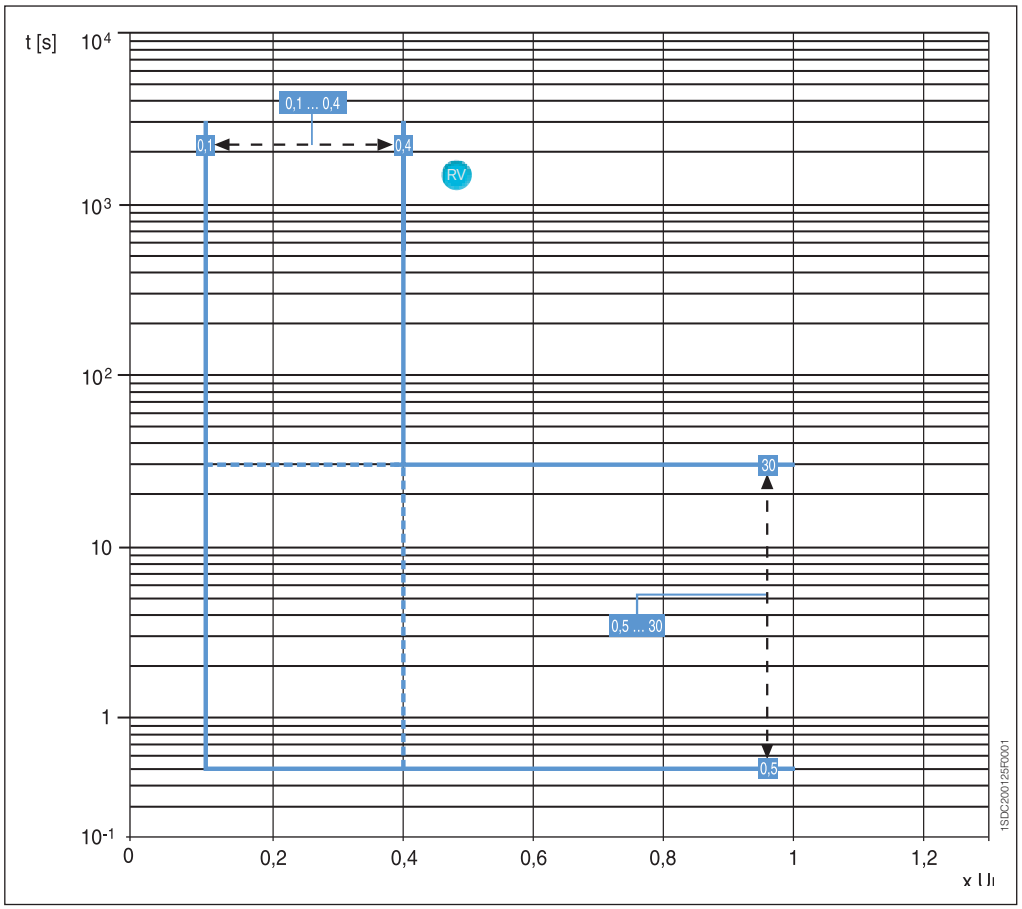

Function RP

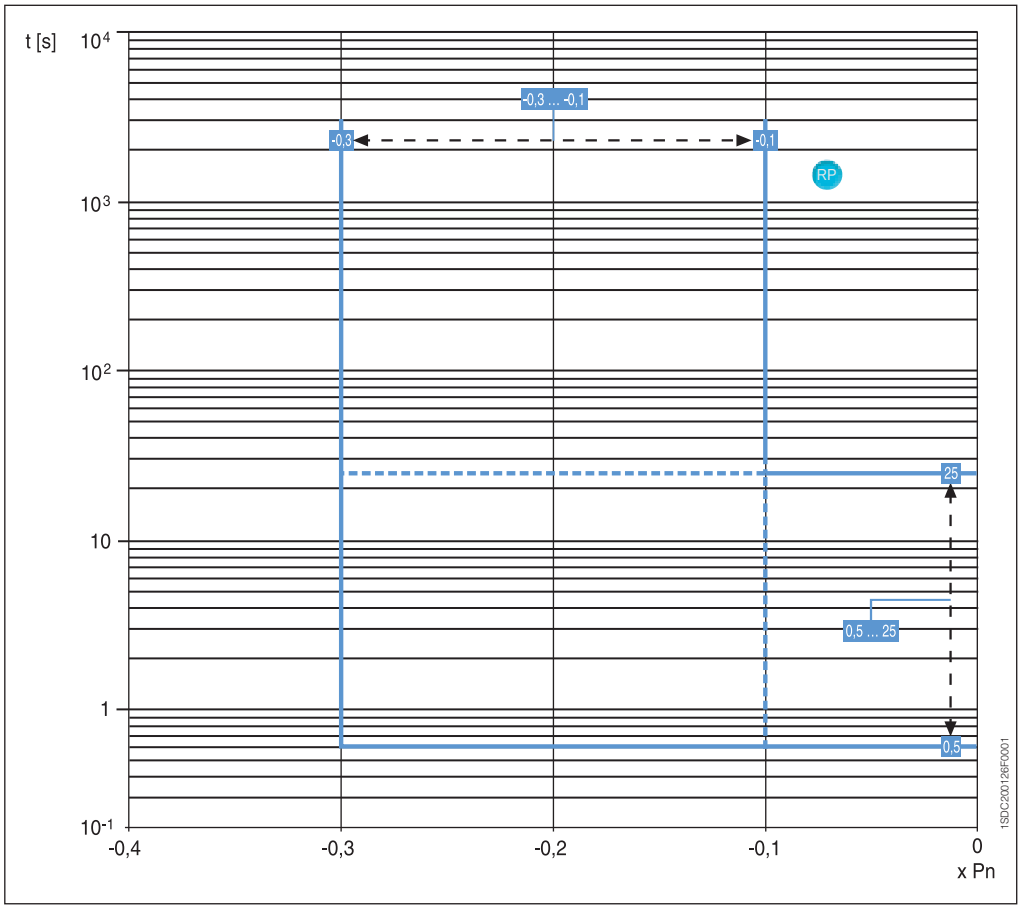

Threshold and trip times tolerances.....page 3/26

Accessories for protection trip units

Additional internal modules

PR332/P and PR333/P trip units can be enriched with additional internal modules, increasing the capacity of the trip unit and making these units highly versatile.

PR330/V Measurement Module

This optional internal module, installed in PR332/P (standard in PR333/P), allows the trip unit to measure the phase and neutral voltages and to process them in order to achieve a series of features, in terms of protection and measurement. PR330/V module, when is ordered mounted on the circuit-breaker, does not require any external connection or voltage transformers since it is connected internally to the upper terminals of X1 circuit-breaker (selector in “INT” position) though the internal voltage sockets.
At the ordering stage, the code of the internal voltage socket can be specified in addition to the code of the X1 circuit-breaker so as to guarantee the possibility to install even afterwards the PR332/P or PR333/P trip unit equipped with the PR330/V module connected internally to the upper terminals.
When necessary, the connection of voltage pick-ups can be moved to any other points (i.e. lower terminals), by using the alternative connection located in the terminal box and switching the voltage selector in “EXT” position. For the dielectric test of the circuit-breaker, the selector must be switched to “TEST” position.
PR330/V is also able to energize the PR332/P while line voltage input is above 85V. The use of Voltage Transformers is mandatory for rated voltages higher than 690V.Voltage transformers shall have burdens between 5VA and 10VA and accuracy class 0.5 or better.

Additional Protections with PR330/V:
– UnderVoltage (UV) protection
– Overvoltage (OV) protection
– Residual voltage (RV) protection
– Reverse power (RP) protection
– Underfrequency (UF) protection
– Overfrequency (OF) protection
– Phase sequence (alarm only) - for PR333/P only
All the above indicated protections can be excluded, although it is possible to leave only the alarm active when required: in this case the release will indicate the “ALARM” status.

Voltage protections UV, OV, RV

With the PR330/V module, the PR332/P trip unit is able to provide the undervoltage and overvoltage protection (UV, OV) and the residual voltage protection (RV). The residual voltage protection RV identifies interruptions of the neutral (or of the earthing conductor in systems with earthed neutral) and faults that shift the star centre in systems with insulated neutral (e.g. large earth faults). The star centre shift is calculated as a vectorial sum of the phase voltages.

Reverse power protection RP

Reverse power protection is especially suitable for protecting large machines such as motors and generators. The PR332/P with the PR330/V module can analyse the direction of the active power and open the circuit-breaker if the direction is opposite to that of normal operation. The reverse power threshold and the trip time are adjustable.

Frequency protections UF, OF

The frequency protections detect the variation of network frequency above adjustable thresholds, generating an alarm or opening the circuit-breaker. It is a protection typically needed in an isolated network, i.e. powered by a genset.

PR330/D-M Communication Module

1SDC200539F0001

PR330/D-M communication module is the solution for connecting Emax to a Modbus network, allowing the remote supervision and control of the circuit-breaker. It is suitable for PR332/P and PR333/P trip units. As for PR330/V, this module can be added at any time to the protection release and its presence is automatically detected. When ordered separately from the circuitbreakers it is supplied complete of all the accessories needed for its installation, such as precabled auxiliary switches and cables for signalling the circuit-breaker status (springs, position inserted). Refer to circuit diagram page 7/9 for details about connections.
The list of available functions can be found on page 3/42.
It is provided with three LEDS on the front side:
– Power LED
– Rx/Tx LEDs.
For ordering with the PR330/R actuator unit.

PR330/R actuator module

1SDC200600F0001

The PR330/R actuator module is fitted in the right slot of Emax X1 and it is used for opening and closing the circuit-breaker by means of the shunt opening and closing releases by remote control. It is suitable for the PR332/P and PR333/P and must be ordered when the communication module PR330/D-M is available.

3

Accessories for protection trip units

Additional external modules

PR331/P, PR332/P and PR333/P trip units can be enriched with additional external modules.

PR030/B power supply unit


1SDC200601F0001

This accessory, always supplied with the PR332/P and PR333/P range of trip units, makes it possible to read and configure the parameters of the unit whatever the status of the circuit breaker (open-closed, in test isolated or racked-in position, with or without auxiliary power supply).
PR030/B is also needed for reading trip data if the trip occurred more than 48 hours earlier and the release was no longer powered.
An internal electronic circuit supplies the unit for approximately 3 consecutive hours for the sole purpose of reading and configuring data.
In relation to the amount of use, battery life decreases if the PR030/B accessory is also used to perform the Trip test & Auto test.

3

Interface from front of HMI030 multimeter


1SDC200602F0001

This accessory, suitable for all protection releases, is designed for the installation on the front side of the switchboard. It consists of a graphic display where all the measurements and alarms/ events of the release are shown. The user can browse the measurements by using the navigation pushbuttons, similarly to PR332/P, PR333/P, PR122/P and PR123/P. Thanks to the high precision level, the same of the protection releases, the device can replace the traditional instrumentation, without the need for current/voltage transformers. The HMI030 unit requires only a 24 V DC power supply, as it is connected directly to the protection release via a serial line.

BT030 Communication unit


1SDC200603F0001

BT030 is a device to be connected on Test connector of PR331/P, PR332/P and PR333/P for Emax X1, as well as the PR121/P, PR122/P and PR123/P for Emax E1-E6 . It allows Bluetooth communication among the Protection trip unit and a PDA or a Notebook with a Bluetooth port. BT030 can also be used with Tmax moulded-case circuit-breakers equipped with PR222DS/PD; this device is dedicated to the use with SD-Pocket application.
BT030 can provide the power supply needed to energize itself and the protection release by means of a Li-ion rechargeable battery.

PR010/T configuration test unit

The PR010/T unit performs the functions of testing, programming and reading parameters for the protection units equipping Emax X1 low-voltage air circuit-breakers.
In particular, the test function involves the following trip units:
– PR331/P (all versions)
– PR332/P (all versions)
– PR333/P (all versions)
whereas the parameter programming and reading functions are available only for the more advanced trip unit, regard the range of PR332/P and PR333/P trip units.
All of the functions mentioned can be carried out “on board” by connecting the PR010/T unit to the front multi-pin connector on the various protection units. Special interfacing cables supplied with the unit must be used for this connection.
The PR010/T, which HMI interface is made of a touchpad and a multi-line alphanumeric display.
The unit has also two LEDs to indicate, respectively:
– POWER-ON and STAND BY
– battery charge state.
Two different types of test are available: automatic (for PR331/P, PR332/P and PR333/P) and manual.
By connection to a PC (using the floppy-disk supplied by ABB SACE), it is also possible to upgrade the software of the PR010/T unit and upgrade it to the development of new products.

It is also possible to store the most important test results in the unit itself, and to send a report to the personal computer with the following information:
– type of protection tested
– threshold selected
– curve selected
– phase tested
– test current
– estimated trip time
– measured trip time
– test results.

At least five complete tests can be stored in the memory. The report downloaded onto a PC allows creation of an archive of tests carried out on the installation.
In automatic mode, the PR010/T unit with the PR332/P range tests the following:
– protection functions L, S, I
– G protection function with internal transformer
– G protection function with toroid on the transformer star centre
– monitoring of correct microprocessor operation.
The unit can also test the following protections of PR332/P, equipped with PR330/V, or PR333/P:
– overvoltage protection function OV
– undervoltage protection function UV
– residual voltage protection function RV
– phase unbalance protection function U.

The PR010/T unit is pocket-size and runs on rechargeable batteries and/or with an external power supply (always supplied) with a rated voltage of 100-240V AC/12V DC.

The standard version of the PR010/T unit includes:
– PR010/T test unit complete with rechargeable batteries
– TT1 test unit
– 100 - 240V AC/12V DC external power supply with cable
– cables to connect the unit and connector
– cable to connect the unit and computer (RS232 serial)
– user manual and floppy-disc containing application software
– plastic box.

Accessories for protection trip units

SACE PR021/K signalling unit

The SACE PR021/K signalling unit can convert the digital signals supplied by the PR331, PR332 and PR333 protection unit into electrical signals, via normally open electrical contacts (potential free). The unit is connected to the protection release by means of a dedicated serial line through which all of the information about the activation status of the protection functions flows. The corresponding power contacts are closed based on this information.

The following signals/contacts are available:
– overload pre-alarm L (the alarm signal remains active throughout the overload, until the release is tripped)
– timing and tripping of any protections (the trip signals of the protections remain active during the timing phase, and after the release has tripped)
– protection I tripped
– timing and overtemperature threshold exceeded (T>85 °C)
– two load control contacts (connection and disconnection of a load, or disconnection of two loads)
– release tripped
– dialogue fault on a serial line (connecting the protection and signalling units)
– phase unbalance.

Setting a dip-switch allows up to seven signal contacts to be freely configured in PR332-PR333, including: directional protection D tripped, under- and overvoltage UV and OV tripped, reverse power RP tripped, and others.
Two contacts available on the SACE PR021/K unit (load control) can pilot a circuit-breaker shunt opening or closing release. These contacts allow various applications, including load control, alarms, signals and electrical locks.
Pressing the Reset pushbutton resets the status of all signals.
The unit also contains ten LEDs to visually signal the following information:
– “Power ON”: auxiliary power supply present
– “TX (Int Bus)”: flashing synchronized with dialogue with the Internal Bus
– eight LEDs associated with the signalling contacts.

The table below lists the characteristics of the signalling contacts available in the SACE PR021/K unit.

Auxiliary power supply	24 V DC ± 20%
Maximum ripple	5%
Rated power @ 24 V	4.4 W

Specifications of the signalling relays		
Type		Monostable STDP
Maximum switching power (resistive load)		100 W/1250 VA
Maximum switching voltage		130 V DC/250 V AC
Maximum switching current		5 A
Breaking capacity (resistive load)		
	@ 30V DC	3.3 A
	@ 250V AC	5 A
Contact/coil insulation		2000 V eff (1 min@ 50 Hz)

Communication devices and systems

Industrial networking and ABB Emax


1SDC200303F0001

In addition to providing flexible and safe protection of power installations, ABB SACE Emax electronic trip units have an extended range of communication features, which opens the way for connection of circuit-breakers to the world of industrial communication.
PR332/P and PR333/P electronic trip units can be fitted with communication modules, which make it possible to exchange data and information with other industrial electronic devices by means of a network.
The basic communication protocol implemented is Modbus RTU, a well-known standard of widespread use in industrial automation and power distribution equipment. A Modbus RTU communication interface can be connected immediately and exchange data with the wide range of industrial devices featuring the same protocol.
ABB products featuring the Modbus RTU protocol include:

- low voltage circuit-breakers such as Emax,
- Medium Voltage protection devices,
- sensors,
- automation I/O systems,
- power meters and other measurement devices,
- intelligent devices such as PLCs,
- operator interfaces,
- supervision and control systems.

And, if other communication protocols are required, the ABB Fieldbus Plug system is also available: intelligent field bus protocols such as Profibus-DP and DeviceNet thus become immediately available.

The power of industrial networking

The communication network can be used to read all information available in the protection trip unit, from any location connected to the bus and in real time:

- circuit-breaker status: closed, open, opened by protection trip unit trip,
- all values measured by the protection trip unit: RMS currents, voltages, power, power factor and so on,
- alarms and prealarms from protection trip unit, e.g., overload protection alarm (timing to trip or prealarm warning)
- fault currents in case of circuit-breaker opening on a protection trip,
- number of operations performed by the circuit-breaker, with indication of the number of trips per protection type (short-circuit, overload, etc.),
- complete settings of the protection trip unit,
- estimate of the residual life of circuit-breaker contacts, calculated on the basis of interrupted currents.

Remote control of circuit-breakers is possible: commands to open, close and reset alarms can be issued to the circuit-breaker and protection trip unit. Close commands are executed only after a security check (e.g., that there are no diagnostic alarms active on the release).
It is also possible to change the settings of the protection trip unit remotely by means of the communication bus.
All remote commands can be disabled by a “local” configuration feature, for safety of operators and installation.

Communication devices and systems

Circuit-breakers with communication can easily be integrated with automation and supervision systems. Typical applications include:
- supervision of the installation with continuous data logging (values of currents, voltage, power) and event logging (alarms, faults, trip logs). Supervision can be limited to low voltage devices or include medium voltage and possibly other kinds of industrial apparatus;
- predictive maintenance, based on number of operations of each circuit-breaker, interrupted currents and estimate of residual equipment life;
- load shedding and demand side management under control of PLC, DCS or computers.

Communication products for ABB SACE Emax X1

ABB SACE has developed a complete series of accessories for the Emax family of electronic trip units:
- PR330/D-M communication module;
- EP010 – FBP.

Furthermore, a new generation of software dedicated to installation, configuration, supervision and control of protection trip units and circuit- breakers is now available:
- SD-View 2000;
- SD-Pocket;
- SD-TestBus2.

System architecture for plant supervision and control

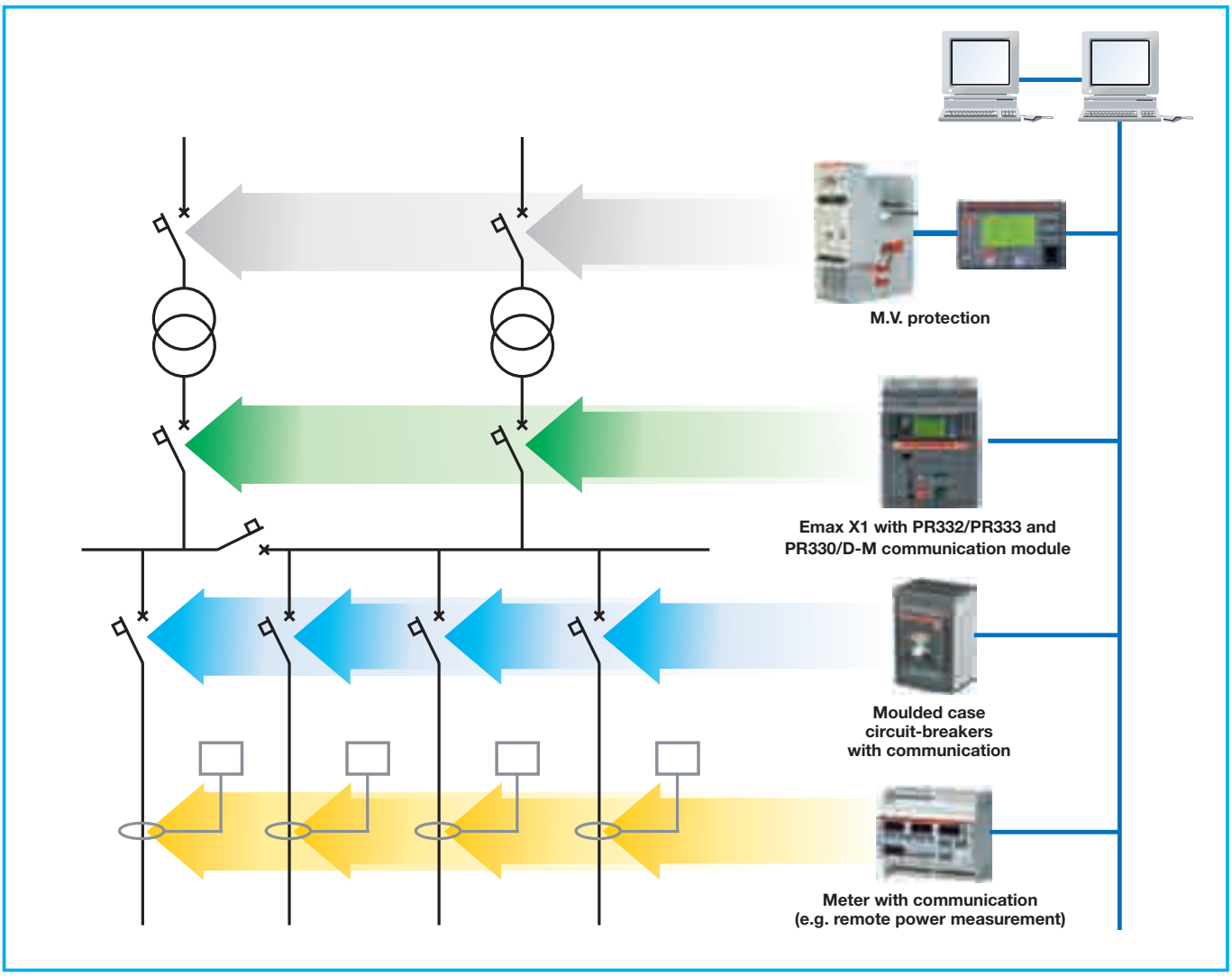

1SDC200539F0001

PR330/D-M

PR330/D-M is the new communication module for PR332/P and PR333/P protection trip units. It is designed to allow easy integration of the Emax X1 circuit-breakers in a Modbus network.
The Modbus RTU protocol is of widespread use in the power as well as the automation industry.
It is based on a master/slave architecture, with a bandrate of up to 19200 bps. A standard Modbus network is easily wired up and configured by means of an RS485 physical layer. ABB SACE releases work as slaves in the field bus network.
All information required for simple integration of PR330/D-M in an industrial communication system are available on the ABB Web page (see www.abb.com).

1SDC200305F0001

EP010 - FBP

EP010 – FBP is the Fieldbus Plug interface between the Emax protection trip units and the ABB Fieldbus Plug system, allowing connection of Emax air circuit-breakers to a Profibus, DeviceNet, or AS-I field bus network.
EP010 – FBP can be connected to the new Emax PR332/P and PR333/P protection trip units (the PR330/D dialogue module is required).

The ABB Fieldbus Plug concept is the latest development in industrial communication systems. All devices feature a standard connection socket, to which a set of interchangeable “smart” connectors can be plugged. Each connector is fitted with advanced electronics implementing the communication interface towards the selected field bus. Selecting a communication system is made as easy as selecting and connecting a plug. Communication systems currently available are Profibus-DP, DeviceNet and AS-i. More are being developed.

Communication devices and systems

Measurement, signalling and data functions available

Details about functions available on PR332/P, PR333/P trip units with PR330/D-M and EP010 – FBP are listed in the table below:

	PR332/P + PR330/D-M	PR333/P + PR330/D-M	PR332/P + PR330/D-M and EP010	PR333/P + PR330/D-M and EP010
Communication functions				
Protocol	Modbus RTU stand.	Modbus RTU stand.	FBP	FBP
Physical layer	RS-485	RS-485	Profibus-DP or DeviceNet cable	Profibus-DP or DeviceNet cable
Maximum baudrate	19200 bps	19200 bps	115 kbps	115 kbps
Measuring functions				
Phase currents	■	■	■	■
Neutral current	■	■	■	■
Ground current	■	■	■	■
Voltage (phase-phase, phase-neutral, residual)	opt. (1)	■	opt. (1) (2)	opt. (2)
Power (active, reactive, apparent)	opt. (1)	■	opt. (1) (2)	opt. (3)
Power factor	opt. (1)	■	opt. (4)	opt. (4)
Frequency and peak factor	opt. (1)	■	opt. (4)	opt. (4)
Energy (active, reactive, apparent)	opt. (1)	■	opt. (4)	opt. (4)
Harmonic analisys		■		opt. (4)
Signalling functions				
LED: auxiliary power supply, warning, alarm	■	■	■	■
Temperature	■	■	■	■
Indication for L, S, I, G and other protection	■	■	■	■
Programmable contact (5)	■	■	■	■
Available data				
Circuit-breaker status (open, closed)	■	■	■	■
Circuit-breaker position (racked-in, racked-out)	■	■	■	■
Mode (local, remote)	■	■	■	■
Protection parameters set	■	■	■	■
Load control parameters	■	■	■	■
Alarms				
Protection L	■	■	■	■
Protection S	■	■	■	■
Protection I	■	■	■	■
Protection G	■	■	■	■
Fault release mechanism failure	■	■	■	■
Undervoltage, overvoltage and residual voltage (timing and trip) protection	opt.	■	opt.	■
Reverse power protection (timing and trip)	opt.	■	opt.	■
Directional protection (timing and trip)		■		■
Underfrequency/overfrequency protection (timing and trip)	opt.	■	opt.	■
Phases rotation		■		■
Maintenance				
Total number of operations	■	■	■	■
Total number of trips	■	■	■	■
Number of trip tests	■	■	■	■
Number of manual operations	■	■	■	■
Number of separate trips for each protection function	■	■	■	■
Contact wear (%)	■	■	■	■
Record data of last trip	■	■	■	■
Operating mechanisms				
Circuit-breaker open/close	■	■	■	■
Reset alarms	■	■	■	■
Setting of curves and protection thresholds	■	■	■	■
Synchronize system time	■	■	■	■
Events				
Status changes in circuit-breaker, protections and all alarms	■	■	■	■

(1) with PR330/V
(2) no residual voltage
(3) no apparent power available
(4) please ask ABB for further details
(5) Typical contact: MOS photo Vmax = 48V DC / 30V AC
Imax = 50 mA DC / 35 mA AC

SD-View 2000

SD-View 2000 is a “ready-to-use” system, consisting of software for personal computers, which allows complete supervision of the low voltage electrical installation. Putting the SD-View 2000 system into operation is quick and easy. In fact, the software itself guides the user in recognizing and configuring the protection units. The user only needs knowledge of the installation (such as how many circuit-breakers are installed and how they are connected to each other). No engineering work on the supervision system is required, since all the pages displayed are already configured in the system, ready to be used.
Usage of the software is intuitive and easy to learn for the operator: SD-View 2000 has graphic pages, based on Internet Explorer, which make the system as simple to manage as surfing on the Internet.

System architecture

System architecture is based on the latest developments in personal computer and industrial communication network technology.
SD-View 2000 is able to manage up to 8 serial lines, with a maximum of 31 devices each.

- Up to 8 serial RS485 ports
- Up to 31 devices for each serial port
- 9600 – 19200 Baud
- Modbus RTU protocol

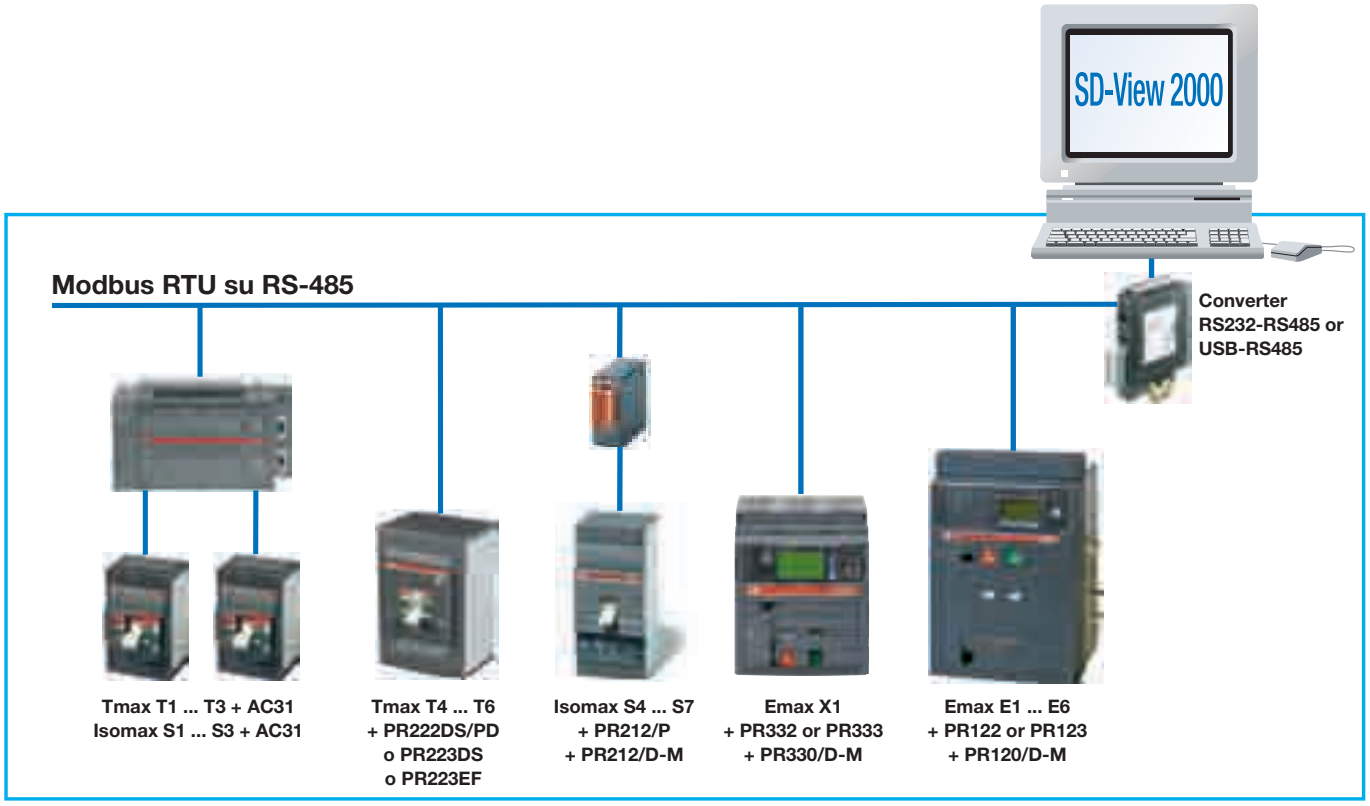

Communication devices and systems

Complete supervision of the installation

SD-View 2000 is the ideal tool available to system managers, in order to have the situation of the installation under control at all times and to be able to supervision all the functions easily and in real time.

1SDC200307F0001

SD-View 2000 allows information from the installation to be received and send commands to the circuit-breakers and the relative trip units.
In particular, it is possible to:

- send opening and closing commands to the circuit-breakers
- read the electrical installation values (current, voltage, power factor, etc.)
- read and modify the trip characteristics of the protection units

1SDC200308F0001

- determine the status of the apparatus (open, closed, number of operations, trip for fault, etc.)
- determine the abnormal operating situations (e.g. overload) and, in the case of the releases tripping, the type of fault (short-circuit, earth fault, etc.)
- plot by means of graphs the temporal evolution of the installation, through the history log of currents and voltages (with a time span for 15 days)

Access to the various system functions can be enabled by means of passwords with different levels of authorization. Usage of the system is really simple and the graphic pages relative to each device are particularly intuitive and easy to use.

1SDC200309F0001

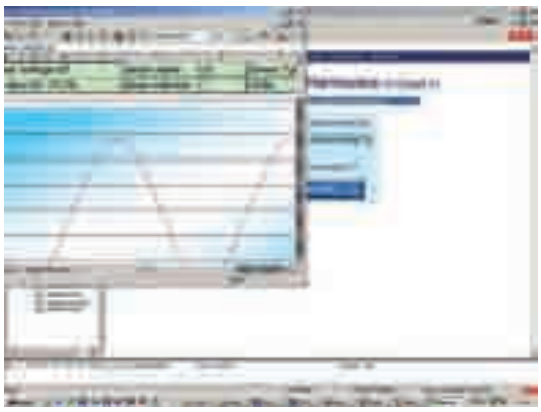

Devices which can be connected

The circuit-breakers with electronic trip units which can be interfaced with SD-View 2000 are:

- Emax X1 air circuit-breakers and Tmax T7 moulded-case circuit-breakers fitted with PR332/P or PR333/P trip units with Modbus RTU PR330/D-M communication unit
- Emax air circuit-breakers from E1 to E6 fitted with PR122/P or PR123/P trip units with Modbus RTU PR120/D-M communication unit
- Emax air circuit-breakers from E1 to E6 fitted with PR112/PD or PR113/PD Modbus trip units
- Tmax moulded-case circuit-breakers from T4,T5,T6 fitted with PR222DS/PD or PR223DS or PR223EF trip units.
- Isomax circuit-breakers from S4 to S7 fitted with PR212/P trip unit with Modbus RTU PR212/D-M communication unit.

In addition, SD-View 2000 can acquire current, voltage and power measurements in real time from the MTME-485 multimeters with Modbus communication.
Furthermore, it is possible to interface any air or molded-case circuit breaker or switchdisconnector, not fitted with a communication module, with the SD-View 2000 supervision system by means of a PLC type ABB AC31. For the circuit-breakers or switch disconnectors connected in this way, SD-View 2000 shows the status of the apparatus (open, closed, tripped, racket-in or racket-out) in real time and allows it to be operated remotely.

Technical characteristics
Up to 4 serial ports
Up to 31 ABB SACE devices for each serial port
9600 or 19200 baud
Modbus® RTU Protocol

Personal computer requirements

Pentium 1 GHz, 512 MB RAM, 100 GB hard disk, Windows 2000 XP, Internet Explorer 6, Ethernet card, RS232 Serial port, USB port (for the license key), Printer (optional).

BT030

BT030 is a device to be connected to the Test connector of PR331/P, PR332/P and PR333/P. It allows Bluetooth communication between the Protection release and a PDA or a Notebook with a Bluetooth port.
BT030 can also be used with Tmax moulded-case circuit-breakers equipped with PR222DS/P, PR222DS/PD, PR223DS, PR223EF and PR232/P. This device is dedicated to use with the SD-Pocket and SD-TestBus2 application.
It can provide the auxiliary supply needed to energize the protection release by means of rechargeable batteries.

SD-Pocket

SD-Pocket is an application designed to connect the new protection trip units to a PDA or to a personal computer. This means it is now possible to use wireless communication to:
– configure the protection threshold function;
– monitor measurement functions, including reading of data recorded in data logger (PR332/P or PR333/P);
– verify the status of the circuit-breaker (i.e. number of operations, trip data, according to the trip unit connected).
SD-Pocket application scenarios include:
• during start-up of switchgear, with rapid and error-free transfer of the protection parameters to the trip units (also using the dedicated exchange file directly from Docwin);
• during normal installation service, gathering information on the circuit-breaker and load conditions (last trip information, runtime currents, and other information).

To use all these functions, it is sufficient to have a PDA with MS Windows Mobile 2003 and BT interface or a personal computer with MS Windows 2000/XP OS and new BT030 Bluetooth interface devices.
SD-Pocket is freeware and it can be downloaded from the ABB SACE's website (http:// www.abb.com). It is always provided with BT030 Bluetooth interface device, and its use does not require the presence of dialogue units for the trip units.

Communication devices and systems

SD-TestBus2

SD-TestBus2 is the commissioning and diagnostic software of ABB SACE for all Modbus RTU devices.
It can be used during system startup, or to troubleshoot an installed network.
SD-TestBus2 automatically scans the RS-485 bus, detects all connected devices and checks their communication settings. All possible combination of device address, parity and baud rate are checked.
A click on “scan” is enough to spot devices which are not responding, wrong addresses, misconfigured parity bits, and so on. This function is not limited to ABB SACE is devices: all standard Modbus RTU devices are detected and their configuration is displayed.
After the scan, the software displays warning messages about potential problems and configuration errors, allowing complete diagnosis of a field bus network.
When ABB SACE’s circuit-breakers are detected, additional functions can be used to check wirings, send open/ close/reset commands, and retrieve diagnostic information.
This user-friendly tool makes commissioning of Modbus networks a breeze.
SD-TestBus2 can also communicate though a Bluetooth adapter (widcomm compatible) with all the ABB SACE devices equipped with BT030 wireless communication unit.
SD-TestBus2 is freeware and can be downloaded from ABB SACE’s website (http:// www.abb.com).

1SDC200311F0001

X1 by Emax

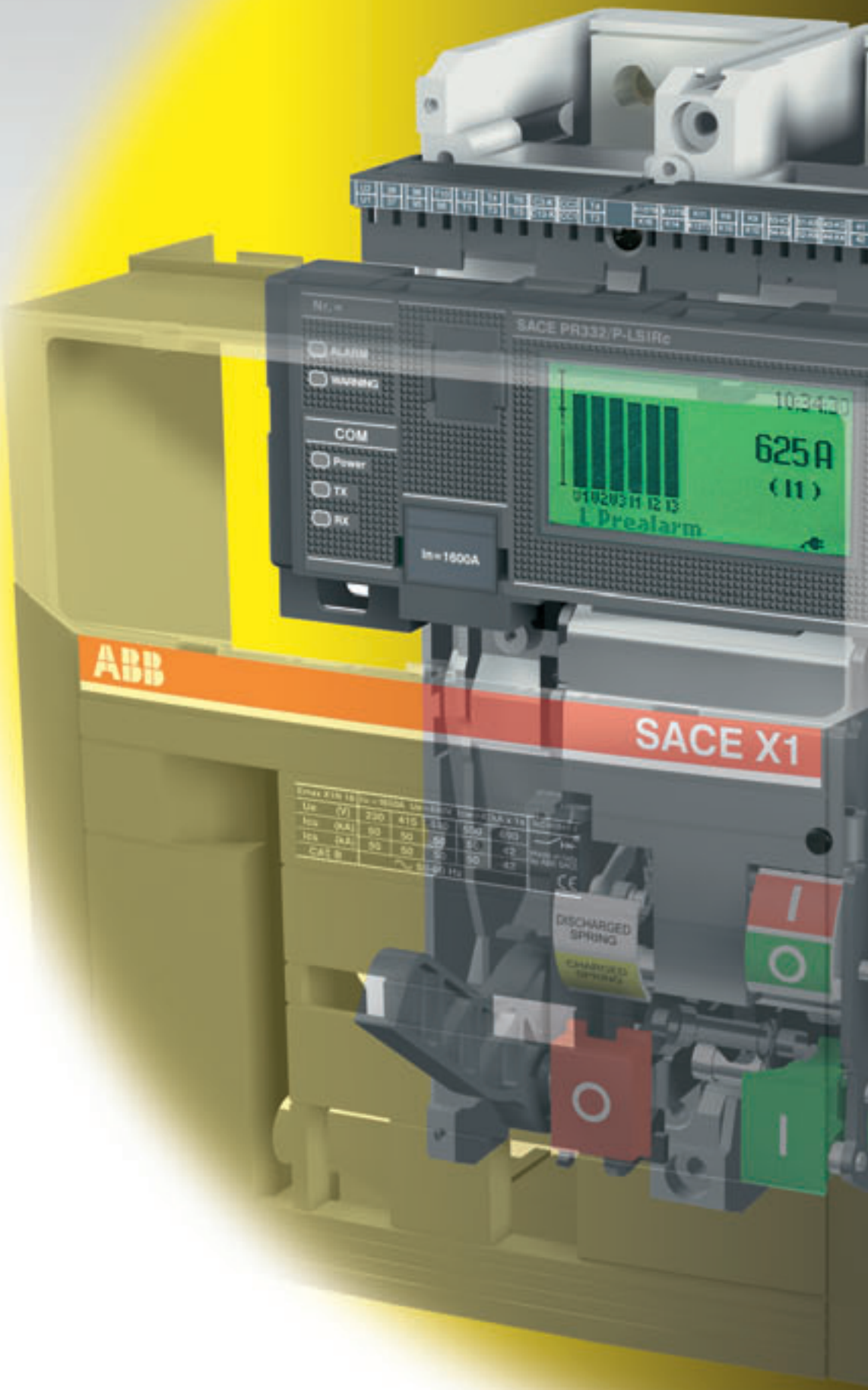
SACE PR332/P-LSIRc
ALARM
WARNING
COM
Power
Tx
Rx
625A
(I1)
L Prealarm
In=1600A
ABB
SACE X1
DISCHARGED SPRING

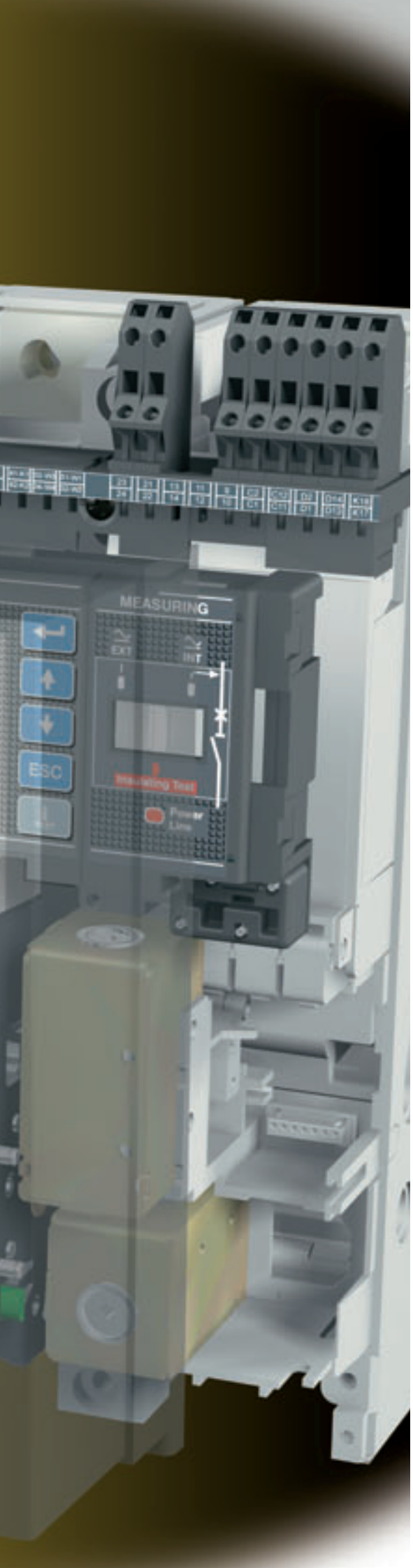

Accessories

Contents

Functions of the accessories

The table below lists a few functions that can be obtained by selecting the appropriate accessories from among those provided.
Several of the functions listed may be needed at the same time, depending on how the circuit-breaker is used. See the relative section for a detailed description of the individual accessories.

Function	Components
Remote control	• Opening release • Closing release • Geared motor for automatic charging of the closing springs
Remote signalling or actuation of automatic functions depending on the state (open-closed-tripped) or position (*racked-in, test isolated, racked-out*) of the circuit-breaker	• Circuit-breaker open-closed auxiliary contacts • Circuit-breaker *racked-in, test isolated, racked-out* auxiliary contacts (withdrawable circuit-breaker only) • Contact for electrical signalling of overcurrent trip units tripped • Contact signalling "ready to close" (RTC) • Contact for signalling springs charged
Remote opening for various needs, including: – manual emergency control – opening dependent on tripping of other interruption devices or system automation needs (1)	• Opening or undervoltage release
Automatic opening of the circuit-breaker for undervoltage (for example, when operating asynchronous motors)	• Instantaneous or time delay undervoltage release (2)
Increased degree of protection	• IP54 door protection
Mechanical safety locks for maintenance or functional requirements for interlocking two or more circuit-breakers	• Key lock in open position • Padlock device in open position • Key lock and padlocks in *racked-in*, *test isolated, racked-out* position
Automatic switching of power supplies	• Mechanical interlock between two circuit-breakers • Automatic transfer switch - ATS010

(1) Examples:
– circuit-breakers on Low Voltage side of parallel transformers that must open automatically when the Medium Voltage side device opens.
– automatic opening for control by external relay (undervoltage, residual current, etc.).

(2) The time-delay device is recommended when unwanted operation; due to temporary voltage drops, is to be avoided (for functional or safety reasons).

Accessories supplied as standard

The following standard accessories are supplied depending on the circuit-breaker version:

Fixed circuit-breaker:

- Flange for switchgear compartment door (IP30)
- Four auxiliary contacts for electrical signalling of circuit-breaker open/closed (for automatic circuit-breakers only) (*)
- Terminal box for connecting outgoing auxiliaries
- Mechanical signalling of trip units tripped (*)
- Front terminals
- Support plate for fixing on floor

Note:
(*) Not supplied with the switch disconnector.

4

Withdrawable circuit-breaker:

- **Moving part:**
- 4 auxiliary contacts for electrical signalling of circuit-breaker and relative terminals open/closed (only for automatic circuit-breakers) (*)
- Block of right-hand sliding contacts to connect the auxiliary contacts (*)
- Block of central sliding contacts to connect the protection releases (*)
- Mechanical signalling of protection release tripped (*)

- **Fixed part (1):**
- Flange for switchgear compartment door
- Rear orientated terminals
- Anti-racking-in lock for circuit-breakers with different rated currents
- Racking-out lever
- Shutter padlock device

Note:
(*) Not supplied with the switch disconnector.
(1) the blocks of sliding contacts for the fixed part are not supplied as standard and must therefore be ordered (see page 4/12)

Accessories supplied on request

The ranges	Automatic circuit-breakers		Switch-disconnectors	
	Circuit-breakers for applications up to 1000V AC		Switch-disconnectors for applications up to 1000V AC	
Circuit-breaker version	**Fixed**	**Withdrawable**	**Fixed**	**Withdrawable**
1a) Shunt opening/closing release (SOR/SCR) and second shunt opening release (SOR2)	■	■	■	■
1b) SOR test unit	■	■	■	■
2a) Undervoltage rerlease (UVR)	■	■	■	■
2b) Time-delay device for undervoltage release (UVD)	■	■	■	■
3) Geared motor for automatic charging of closing springs (M)	■	■	■	■
4a) Electrical signalling of electronic trip units tripped (AUX-SA)	■	■		
4b) Electrical signalling of electronic trip units tripped with remote reset command (TRIP RESET)	■	■		
5a) Electrical signalling of circuit-breaker open/closed (1) (AUX)	■	■	■	■
5b) Electrical signalling of circuit-breaker racked-in/isolated for test/racked-out (AUP)		■		■
5c) Contact signalling closing springs charged (AUX-SC)	■	■	■	■
5d) “Ready to close” signalling contact (AUX-RTC)	■	■	■	■
6a) Current sensor for neutral conductor outside circuit-breaker	■	■		
6b) Homopolar sensor for main power supply earthing conductor (star centre of the transformer)	■	■		
6c) Homopolar toroid for residual current protection	■	■		
7) Mechanical operation counter (MOC)	■	■	■	■
8a-b) Lock in open position (key 8a; padlock 8b) (KLC and PLL)	■	■	■	■
8c) Circuit-breaker lock in racked-in/isolated for test/racked-out position (KLF FP)		■		■
8d) Accessories for lock in racked-out position (KLF FP)		■		■
8e) Mechanical lock for compartment door	■	■	■	■
9a) Opening and closing pushbuttons protection (TPC)	■	■	■	■
9b) IP54 door protection	■	■	■	■
10) Sliding contact blocks	■	■		
11) Mechanical interlock (MIC)	■	■	■	■
12) Automatic transfer switch - ATS010 (2)	■	■	■	■

CAPTION

■ Accessory on request for fixed circuit-breaker or moving part

■ Accessory on request for fixed part

(1) For circuit-breakers, four auxiliary contacts for electrical signalling of circuit-breaker open/closed are included in the supply as standard

(2) Incompatible with the range of circuit-breakers for applications up to 1000V AC

Shunt opening and closing releases

1a) Shunt opening and closing release (SOR/SCR) and second opening release (SOR2)

(1) The minimum impulse current duration time in instantaneous service must be 100 ms

(2) If the opening release is permanently connected to the power supply, wait at least 30 ms before sending the command to the shunt closing release.

Allows remote control opening or closing of the apparatus, depending on the installation position and connection of the releases on the support. The release can, in fact, be used for either of these two applications. Given the characteristics of the circuit-breaker operating mechanism, opening (with the circuit-breaker closed) is always possible, whereas closing is only possible when the closing springs are charged. The release can operate with direct current or alternating current. This release provides instantaneous operation (1), but can be powered permanently (2).

Some installations require very high safety in controlling circuit-breaker opening remotely. In particular, the control and opening release circuits must be duplicated. To meet these needs, SACE Emax X1 can be equipped with a second shunt opening release.

The seat of the second shunt opening release is that of the undervoltage release, which is therefore incompatible with this type of installation.

The technical specifications of the second shunt opening release remain identical to those of the standard shunt opening release.

When used as a permanently powered closing release, it is necessary to momentarily de-energize the shunt closing release in order to close the circuit-breaker again after opening (the circuit-breaker operating mechanism has an anti-pumping device).

4

Characteristics		
Power supply (Un):	24 V AC/DC	240-250 V AC/DC
	30 V AC/DC	380-400 V AC
	48 V AC/DC	415-440 V AC
	60 V AC/DC	
	110-120 V AC/DC	
	120 ... 127 V AC/DC	
	220 ... 240 V AC/DC	
Operating limits:	(SOR-SOR2): 70% ... 110% Un	
(IEC EN 60947-2 Standards)	(SCR): 85% ... 110% Un	
Inrush power (Ps):	DC = 300 W	
Inrush time ~100 ms	AC = 300 VA	
Continuous power (Pc):	DC = 3.5 W	
	AC = 3.5 VA	
Opening time (SOR- SOR2):	(max) 20 ms	
Closing time (SCR):	(max) 50 ms	
Insulation voltage:	2500 V 50 Hz (for 1 min)	

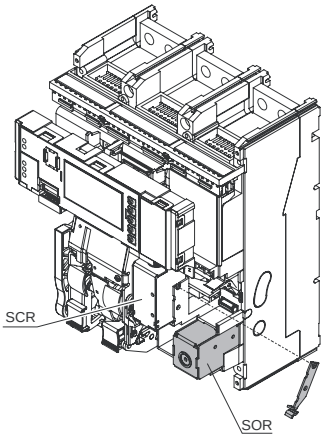

Shunt opening and closing releases

1b) SOR Test Unit

The SOR control and monitoring Test Unit helps ensure that the various versions of SACE Emax X1 opening releases are running smoothly, to guarantee a high level of reliability in controlling circuit-breaker opening.
Under particularly severe operating conditions or simply for remote control of the circuit-breaker, the opening release is widely used as an accessory for the SACE Emax series of air circuit-breakers.
Keeping all the functions of this accessory is a necessary condition to guarantee a high level of safety in the installation: it is therefore necessary to have a device available which cyclically checks correct operation of the release, signalling any malfunctions.
The SOR control and monitoring Test Unit ensures the continuity of opening releases with a rated operating voltage between 24 V and 250 V (AC and DC), as well as the functions of the opening coil electronic circuit are verified.
Continuity is checked cyclically with an interval of 20s between tests. The unit has optic signals via LEDs on the front, which provide the following information in particular:
– POWER ON: power supply present
– SOR TESTING: test in progress
– TEST FAILED: signal following a failed test or lack of auxiliary power supply
– ALARM: signal given following three failed tests.
Two relays with one change-over are also available on board the unit, which allow remote signalling of the following two events:
– failure of a test - resetting takes place automatically when the alarm stops)
– failure of three tests - resetting occurs only by pressing the manual RESET on the front of the unit)

Characteristics of device	
Auxiliary power supply	24 V ... 250 V AC/DC

Specifications of the signalling relays	
Maximum interrupted current	6 A
Maximum interrupted voltage	250V AC

Undervoltage release

2a) Undervoltage release (UVR)


1SDC200543F0001

The undervoltage release opens the circuit-breaker when there is a significant voltage drop or power failure. It can be used for remote release (using normally-closed pushbuttons), for a lock on closing or for monitoring the voltage in the primary and secondary circuits. The power supply for the release is therefore obtained on the supply side of the circuit-breaker or from an independent source. The circuit-breaker can only be closed when the release is powered (closing is mechanically locked).
The release can operate with direct current (V DC) or alternating current (V AC).
The circuit-breaker is opened with release power supply voltages of 35-70% Un.
The circuit-breaker can be closed with a release power supply voltage of 85-110% Un.
It can be fitted with a contact to signal when the undervoltage release is energized (C. aux YU) (see accessory 5d).

Characteristics		
Power supply (Un):	24 V AC/DC	240-250 V AC/DC
	30 V AC/DC	380-400 V AC
	48 V AC/DC	415-440 V AC
	60 V AC/DC	
	110-120 V AC/DC	
	120 ... 127 V AC/DC	
	220 ... 240 V AC/DC	
Operating limits:	IEC EN 60947-2 Standards	
Inrush power (Ps):	DC = 300 W	
Inrush time ~ 100 ms	AC = 300 VA	
Continuous power (Pc):	DC = 3.5 W	
	AC = 3.5 VA	
Opening time (UVR):	30 ms	
Insulation voltage:	2500 V 50 Hz (for 1 min)	

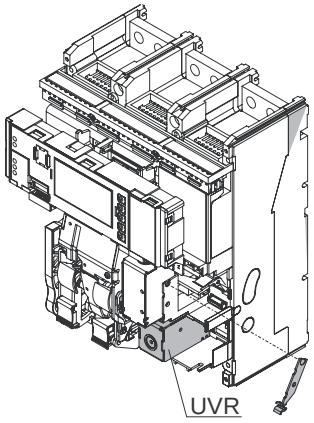

With PR332/P (in the presence of PR330/V) and PR333/P trip units, instead of UVR utilization, the opening could be obtained by activating the protection function “UV”.

2b) Time-delay device for undervoltage release (UVD)


1SDC200138F0001

The undervoltage release can be combined with an electronic time-delay device (UVD) for installation outside the circuit-breaker, allowing delayed release tripping with adjustable preset times.
Use of the delayed undervoltage release is recommended to prevent tripping when the power supply network for the release is subject to brief voltage drops or power supply failures.
Circuit-breaker closing is inhibited when it is not powered. The time-delay device must be used with an undervoltage release with the same voltage.

Characteristics	
Power supply (D):	24-30 V DC
	48 V AC/DC
	60 V AC/DC
	110-125 V AC/DC
	220-250 V AC/DC
Adjustable opening time (UVR+UVD):	0.5 - 1 - 1.5 - 2 - 3 s

Geared motor for the automatic charging of the closing springs
Signal for trip units tripped

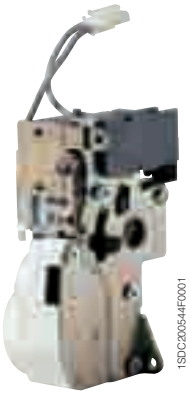

3) Geared motor for the automatic charging of the closing springs (M)

This automatically charges the closing springs of the circuit-breaker operating mechanism. After circuit-breaker closing, the geared motor immediately recharges the closing springs.
The closing springs can, however, be charged manually (using the relative operating mechanism lever) in the event of a power supply failure or during maintenance work.
It is always supplied with a limit contact.

Characteristics	
Power supply	24-30 V AC/DC
	48-60 V AC/DC
	100-130 V AC/DC
	220-250 V AC/DC
	380-415 V AC/DC
Operating limits:	85%...110% Un (IEC EN 60947-2 Standards)
Inrush power (Ps):	DC = 300 W
Inrush time ~200 ms	AC = 300 VA
Rated power (Pn):	DC = 100 W
	AC = 100 VA
Charging time:	8-10 s
Insulation voltage:	2500 V 50 Hz (for 1 min)

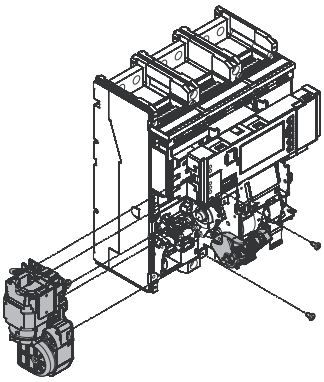

4

4a) Electric signal of electronic trip units being tripped (AUX-SA)

This enables the remote signaling (electrically, via a change-over contact) of the circuit breaker being opened as a result of the over-current releases being tripped. The circuit-breaker can be closed again only after restoring the mechanical button that signals the tripping of the release to its normal position.

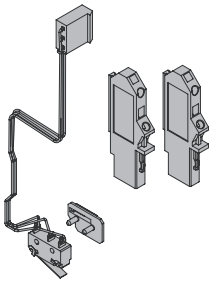

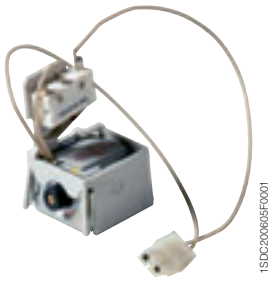

4b) Electric signal of electronic trip units being tripped with remote control (TRIP RESET)

After the overcurrent releases have been tripped, this enables you to restore the circuit breaker by resetting the mechanical button remotely by means of an electric coil. For ordering with the AUX-SA accessory (4a).

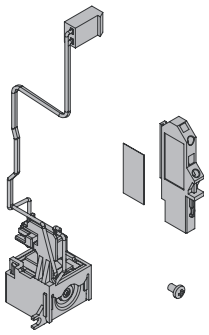

Auxiliary Contacts

5) Auxiliary contacts

Auxiliary contacts are available installed on the circuit-breaker, which enable signalling of the circuit-breaker status. The auxiliary contacts are also available in a special version for application with rated voltages Un < 24 V (digital signals).

Power supply voltage	Resistive load I [A]	
	AC	DC
125 V	–	0.5
250 V	5	0.3
400 V***	3	–

Type of auxiliary contacts	
AUX	4 open/closed changeover contacts*
AUX-SA	1 contact for signalling SA trip
AUX-RTC	1 contact for signalling ready to close
AUX-SC	1 contact signalling closing springs charged
AUP	6 racked-in/test/racked-out contacts**

* Standard supply
** for withdrawable versions (2 racked-in, 2 test isolated, 2 racked-out)
*** AUX-SA and AUX-RTC are available up to 250 V

The versions available are as follows:

4

5a) Electrical signalling of circuit-breaker open/closed (AUX)

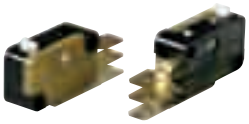
1SDC200606F0001

It is possible to have electrical signalling of the status (open/ closed) of the circuit-breaker using four auxiliary changeover contacts. The auxiliary contacts are always provided with 2 terminals to be mounted in the terminal box to carry out wiring.
Fifteen additional open/closed contacts are also available, installed on the outside of the circuit breaker.

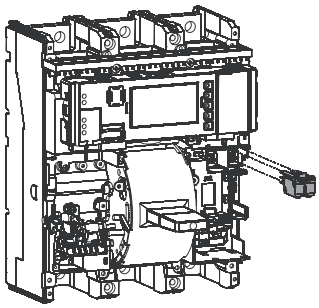

5b) Electrical signalling of circuit-breaker racked-in/test isolated/racked out (AUP)


1SDC200607F0001

In addition to mechanical signalling of the circuit-breaker position, it is also possible to obtain electrical signalling using 6 auxiliary contacts which are installed on the fixed part.
It is only available for withdrawable circuit-breakers, for installation on the fixed part.
The set is made up of:
– 2 contacts for racked-in signal, 2 contacts for racked-out signal, and 2 contact to signal the test isolated position (main pliers isolated, but sliding contacts connected).

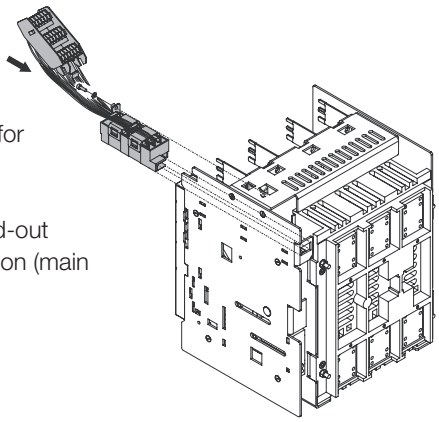

Auxiliary Contacts

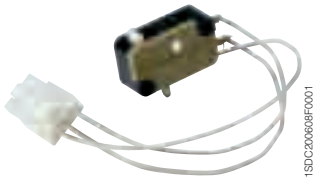

5c) Contact for signalling closing springs charged (AUX-SC)

This is made up of a microswitch which allows remote signalling of the state of the circuit-breaker operating mechanism closing springs (can be supplied only with the spring charging motor).

5d) “Ready to close” signalling contact (AUX-RTC)

Available with wiring directly onto the terminal box, this signals that the circuit-breaker is ready to accept a closing command if the following four conditions are respected:
– circuit-breaker open
– closing springs charged
– any undervoltage release energized
– any shunt opening release de-energized
– armoured trip coil

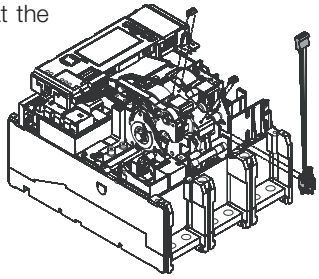

4

Transformers and operation counters

6a) Current sensor for neutral conductor outside circuit-breaker

For three-pole circuit-breakers only, this allows protection of the neutral by connecting it to the overcurrent release. Supplied on request.

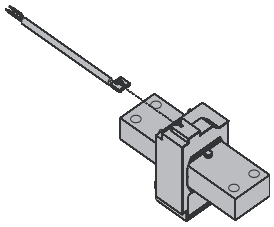

6b) Homopolar sensor for the main power supply earthing conductor (star centre of the transformer)


1SDC200610F0001

SACE PR332/P and PR333/P electronic trip units can be used in combination with an external sensor located on the conductor, which connects the star centre of the MV/LV transformer (homopolar transformer) to earth. In this case, the earth protection is defined as Source Ground Return. Through two different combinations of connection of its terminals (see chapter 8), the In of the same toroid can be set at 100 A, 250 A, 400 A, 800 A.
This is alternative to the homopolar toroid for residual current protection.

4

6c) Homopolar toroid for residual current protection

Features		
Tripping threshold	[A]	3-30
Tripping delay	[s]	0.06 - 0.8


1SDC200611F0001

The toroid allows activation of the residual current protection of the PR332/P LSIRc electronic release (fitted as standard with a Rating Plug for Rc protection). It can also be used in combination with a PR332/P LISG with PR330/V module and Rating Plug for Rc protection or PR333/P LSIG with Rating Plug for Rc protection. In the former case, the residual current protection is obtained at all the PR332/P LSI characteristics and the supplementary ones of the PR330/V module; in the latter case, the residual current protection replaces the external G protection (the G protection remains active).
This accessory must be mounted on the busbars and is alternative to the homopolar sensor.

7) Mechanical operation counter (MOC)


1SDC200612F0001

This is connected to the operating mechanism by means of a simple lever mechanism, and indicates the number of mechanical operations carried out by the circuit-breaker. The count is shown on the front of the circuit-breaker.

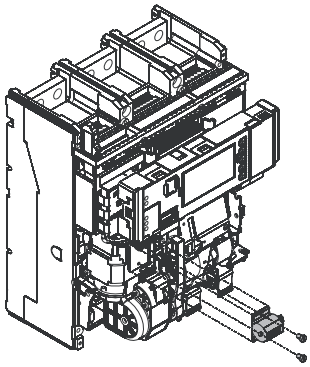

Mechanical safety locks
Transparent protective covers

8) Mechanical safety locks

8a-8b) Lock in open position (KLC and PLL)

Several different mechanisms are available which allow the circuit- breaker to be locked in the open position.
These devices can be controlled by:

- 8a - Key (KLC): a special circular lock with different keys (for a single circuit-breaker) or the same keys (for several circuit-breakers). In the latter case, up to four different key numbers are available.
- 8b - Padlocks (PLL): up to 3 padlocks (not supplied): ø 8 mm.

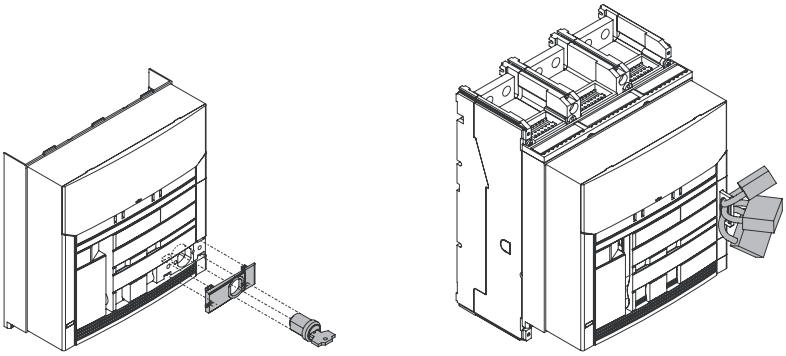

8c) Circuit-breaker lock in racked-in/test isolated/racked-out position (KLF FP)

This device can be controlled by a special circular key lock with different keys (for a single circuit-breaker) or the same keys (for several circuit-breakers - up to four different key numbers available) and padlocks (up to 3 padlocks, not supplied - Ø 4 mm).
It is only available for withdrawable circuit-breakers, to be installed on the fixed part.
The fixed part can be equipped with two different safety locks.

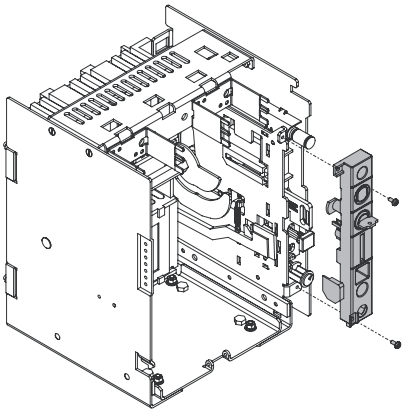

8d) Accessories for lock in racked-out position (KLF FP)

In addition to the circuit-breaker lock in the racked-in/test isolated/ racked-out position, this only allows the circuit-breaker to be locked in the racked-out positions. It is only available for withdrawable circuit-breakers, to be installed on the fixed part.

8e) Mechanical compartment door lock

This does not allow compartment door opening with the circuit-breaker closed (and circuit-breaker racked-in for withdrawable circuit-breakers) and lock circuit-breaker closing with the compartment door open. Two versions are available: a door lock made by means of cables and a second type fixed directly on the side of the circuit-breaker or of the relative fixed part. The cable door lock must also be fitted with the interlock cable kit and the interlocking plate corresponding to the combined circuit-breaker.

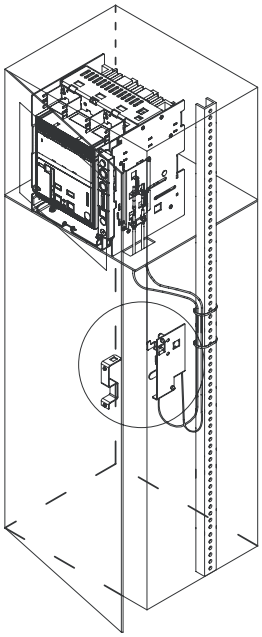

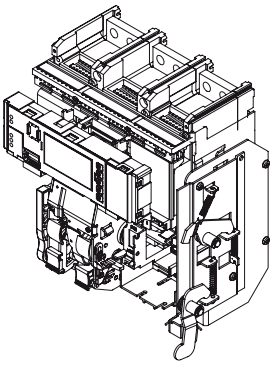

4

9) Transparent protective covers

9a) Opening and closing pushbutton protection (TPC)

These protections, applied over the opening and closing pushbuttons, prevent any circuit-breaker operations unless a special tool is used, or padlock opening (protection for pushbuttons - independent).

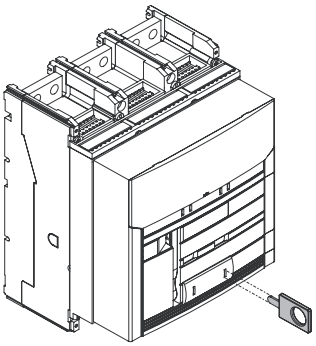

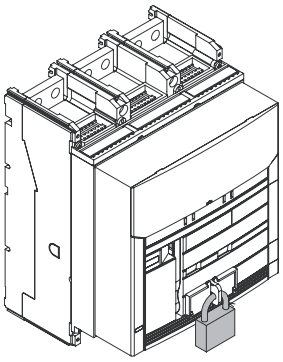

9b) IP54 door protection

This is a transparent plastic protective cover which completely protects the front panel of the circuit breaker, with a protection rating of IP54. Mounted on hinges, it is fitted with a key lock.

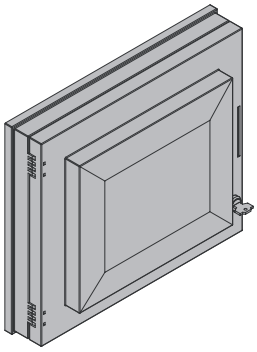

Interlock between circuit-breakers

10) Sliding contact blocks

The sliding contact blocks are needed for X1 in the withdrawable version fitted with electrical accessories or with an electronic release. Their functions is to make the electrical connection of the secondary circuits between the moving and the fixed part. These blocks operate in pairs: one block must be mounted on the moving part and the other on the fixed part. The following table shows the possible combinations between sliding contact blocks and electrical accessories:

Left-hand block	Central block	Right-hand block
Spring charging motor	PR331	Auxiliary contacts
“Closing springs charged” contact	PR332	Shunt opening releases
“Ready to close” contact	PR333	Shunt closing releases
Release trip signalling		Undervoltage release
TRIP RESET device		PR330/R actuator module

If at least one of the electrical accessories in the above table is mounted on the circuit-breaker, the relative pair of blocks must be mounted on the moving part and on the fixed part.
The central lock and the right lock are always supplied by default on the movable part of an Emax X1 circuit breaker, while the left lock is only supplied if you order an electrical accessory connected to it. The locks on the fixed part must be ordered specifically.

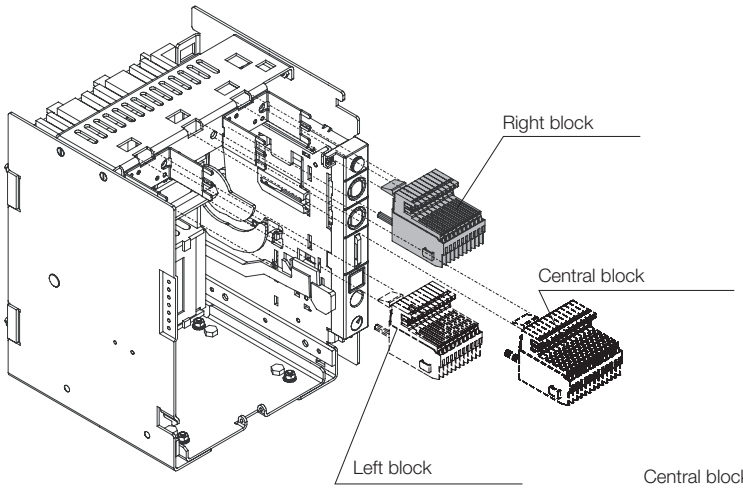

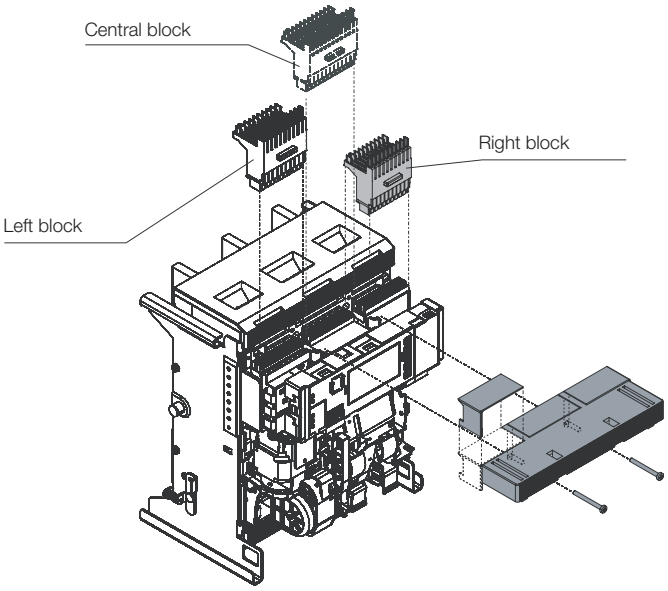

Note:
See the "Overall dimensions" and "Electrical circuit diagrams" chapters for information about dimensions (fixed and withdrawable versions) and settings.

11) Mechanical interlock (MIC)

This mechanism creates a mechanical interlock between two circuit-breakers (even different models and different versions, fixed/withdrawable) using a flexible cable. The circuit diagram for electrical switching using a relay (to be installed by the customer) is supplied with the mechanical interlock. The circuit-breakers can be installed vertically or horizontally.

The mechanical interlocks possible are shown below, depending on whether two circuit-breakers (any model and in any version) are used in the switching system.

Type of interlock	Typical circuit	Possible interlocks
Between two circuit-breakers One normal power supply and one emergency power supply	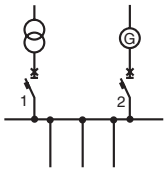 O = Circuit-breaker open I = Circuit-breaker closed	Circuit-breaker 1 can only be closed if 2 is open, and viceversa. 1 2 O O I O O I

The emergency power supply is usually provided to take over from the normal power supply in two instances:
- to power health and safety services (e.g. hospital installations);
- to power parts of installations which are essential for requirements other than safety (e.g. continuous cycle industrial plants).

The range of accessories for SACE Emax circuit-breakers includes solutions for a wide variety of different plant engineering requirements. See the specific regulations regarding protections against overcurrents, direct and indirect contacts, and provisions to improve the reliability and safety of emergency circuits.
Switching from the normal to the emergency power supply can either be carried out manually (locally or by remote control) or automatically.
To this end, the circuit-breakers used for switching must be fitted with the accessories required to allow electric remote control and provide the electrical and mechanical interlocks required by the switching logic.

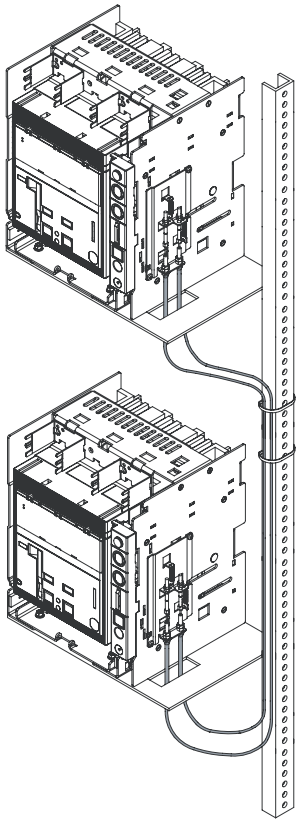

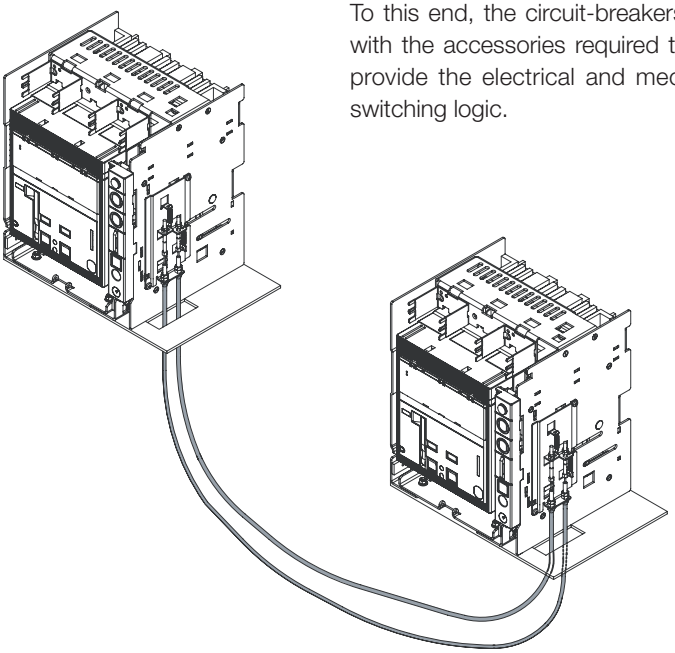

These include:
- the shunt opening release
- the shunt closing release
- the motor operator
- the auxiliary contacts.

Switching can be automated by means of a special electronically-controlled relay circuit, installed by the customer (diagrams provided by ABB SACE).
Mechanical interlocks between two circuit-breakers are made by using cables which can be used both for circuit-breakers side by side or superimposed.
An Emax X1 circuit breaker (in the fixed or withdrawable versions) can be interlocked either with another Emax X1, or with a Tmax T7 or an Emax E1-E6.

Automatic transfer switch - ATS010

1SDC200177F0001

12) Automatic transfer switch - ATS010

The ATS010 switching unit (Automatic transfer switch) is the network-generator switching device offered by ABB SACE. It is based on electronic technology conforming with the major electromagnetic compatibility and environmental Standards (EN 50178, EN 50081-2, EN 50082- 2, IEC 68-2-1, IEC 68-2-2, IEC 68-2-3).
The device is able to manage the entire switching procedure between the normal and emergency line circuit-breakers automatically, allowing great flexibility of adjustment. In case of an anomaly in the normal line voltage, in accordance with the delays set, the normal line circuit-breaker is opened, the generator started and the emergency line circuit-breaker closed.
Similarly, when the normal line returns, the reverse switching procedure is automatically controlled.
It is especially suitable for use in all emergency power supply systems requiring a solution that is ready to install, easy to use and reliable.
Some of the main applications include: power supply for UPS (Uninterrupted Power Supply) units, operating rooms and primary hospital services, emergency power supply for civilian buildings, airports, hotels, data banks and telecommunications systems and power supply of industrial lines for continuous processes.
The switching system consists of the ATS010 unit connected to two motor-driven and mechanically interlocked circuit-breakers. All the circuit-breakers in the SACE Emax series can be used.
The network sensor built into the SACE ATS010 device makes it possible to detect errors in the network voltage. The three inputs can be directly connected to the three phases of the normal power supply line for networks with rated voltage up to 500V AC. Networks with a higher voltage require insertion of voltage transformers (TV), setting a rated voltage for the device that matches their secondary voltage (typically 100V).
Two changeover contacts for each circuit-breaker allow direct connection to the shunt opening and closing releases. The circuit-breaker connection is completed by wiring the status contacts: Open/Closed, Release tripped, Racked-in (for withdrawable/plug-in circuit-breakers).
That is why the following are included on every circuit-breaker connected to the ATS010 unit, in addition to the mechanical interlock accessories:
– spring charging motor,
– opening and closing coil,
– open/closed contact,
– racked-in contact (for withdrawable versions),
– signal and mechanical lock for protection trip unit tripped.

The ATS010 device is designed to ensure extremely high reliability for the system it controls. It contains various safety systems intrinsically related to software and hardware operation.
For software safety, a special logic prevents unwarranted operations, while a constantly operational watchdog system signals any microprocessor malfunctions via a LED on the front of the device.
Hardware safety allows integration of an electrical interlock via a power relay, so that there is no need to use an external electrical interlock system. The manual selector on the front of the device can also control the entire switching procedure, even in the event of a microprocessor fault, by working electromechanically on the control trip units.

General specifications	
Rated supply voltage (galvanically insulated from earth)	24V DC ± 20% 48V DC ± 10% (maximum ripple ± 5%)
Maximum power consumption	5W at 24V DC 10W at 48V DC
Rated power (network present and circuit-breakers not controlled)	1.8W at 24V DC 4.5W at 48V DC
Operating temperature	-25 °C…+70 °C
Maximum humidity	90% without condensation
Storage temperature	-25 °C…+80 °C
Degree of protection	IP54 (front panel)
Dimensions [mm]	144 x 144 x 85
Weight [kg]	0.8

Setting range for thresholds and times		
Minimum voltage	Un Min	-5%…-30% Un
Maximum voltage	Un Max	+5%…+30% Un
Fixed frequency thresholds		10%…+10% fn
t1: opening delay of the normal line circuit-breaker due to network anomaly (CB-N)		0…32s
t2: generator start-up delay due to network anomaly		0…32s
t3: stopping delay of the generator		0…254s
t4: switching delay due to network re-entry		0…254s
t5: closing delay of the emergency line circuit-breaker after detecting the generator voltage (CB-E)		0…32s

Rated voltages settings available	**100, 115, 120, 208, 220, 230, 240, 277, 347, 380, 400, 415, 440, 480, 500 V**

Operating sequence

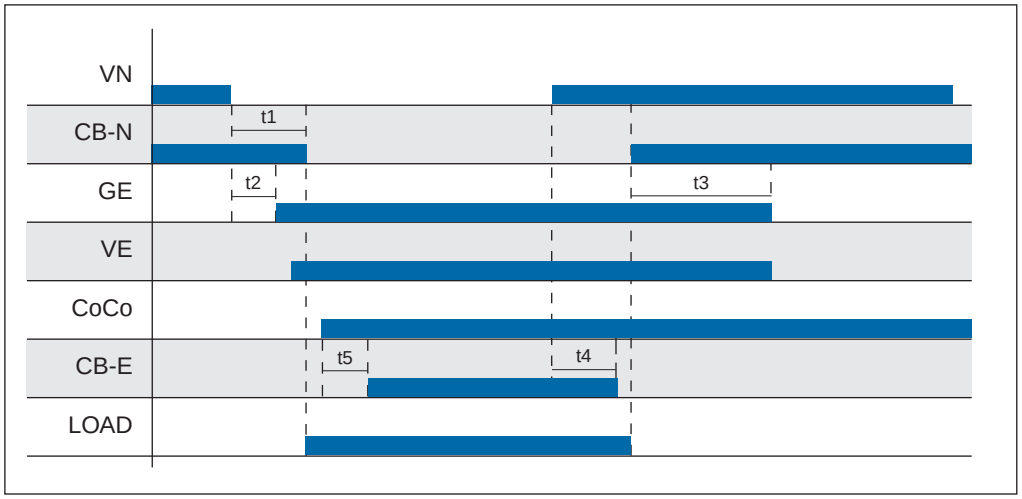

Caption

VN Network voltage
CB-N Normal line circuit-breaker closed
GE Generator
VE Emergency line voltage
CoCo Enabling switching to emergency line
CB-E Emergency line circuit-breaker closed
LOAD Disconnection of lower priority loads

Automatic transfer switch - ATS010

Front panel

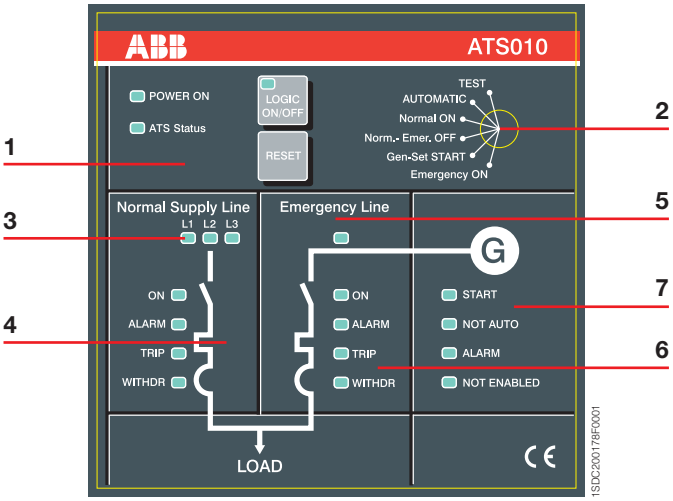

Caption

1 Status of the ATS010 unit and logic
2 Operating mode selector
3 Normal line check
4 Normal line circuit-breaker status
5 Voltage present on the emergency line
6 Emergency line circuit-breaker status
7 Generator status

4

Side panel settings

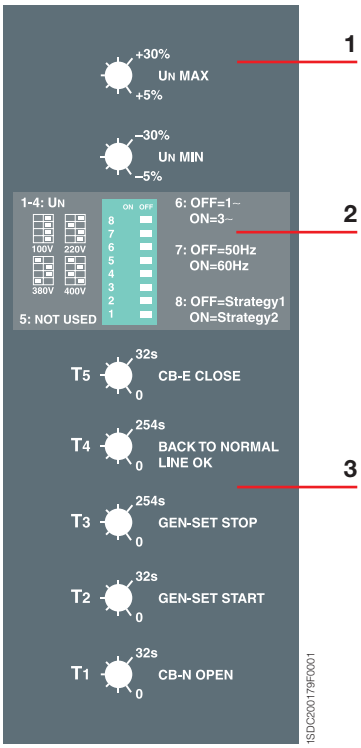

Caption

1 Selectors to adjust the undervoltage and overvoltage thresholds
2 Dip-switches for adjustment:
– rated voltage
– normal single-phase or three-phase line
– network frequency
– switching strategy
3 Switching delay time settings for t1... t5

X-1 by Emax

Circuit-breaker applications

Contents

5

Primary and secondary distribution

Selective protection

Selectivity is normally actuated for tripping overcurrent protection devices in civil and industrial installations to isolate the part affected by a fault from the system, causing only the circuit-breaker immediately on the supply side of the fault to trip. To guarantee selectivity for Emax X1 circuit-breakers, equipped with electronic PR331/P, PR332/P and PR333/P type trip units, the following conditions must be verified:

– that there is no intersection between the time-current curves of the two circuit-breakers, tolerances included
– the minimum difference between the trip time t_2 of the circuit-breaker on the supply side and the time t_2 of the circuit-breaker on the load side, whenever it is an Emax circuit-breaker, must be:
  - t_2 supply side > t_2 load side + 100 ms t = cost
  - t_2 supply side > t_2 load side + 100 ms I^2t = cost (t_2 load side < 400 ms)
  - t_2 supply side > t_2 load side + 200 ms I^2t = cost (t_2 supply side ≥ 400 ms)

When the above conditions are met:

– if function I is active (I3=on), the maximum short-circuit current guaranteeing selectivity is equal to the setting value I3 (minus the tolerances)
– if function I of the supply side circuit-breaker is disabled (I3=off), the short-circuit overcurrent for which selectivity is guaranteed is equal to the selectivity limit Is indicated in the “Coordination Tables” publication.

Circuit diagram with selective coordination of protections

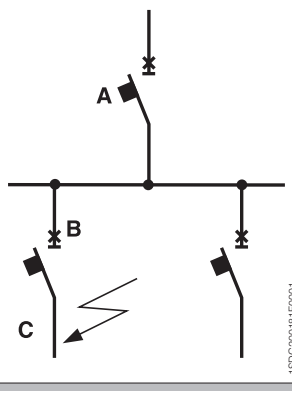

Double S

Thanks to the new PR333/P trip unit, which allows two thresholds of protection function S to be set independently and be activated simultaneously, selectivity can also be achieved under highly critical conditions.

Dual Setting

Thanks to the new PR333/P trip unit, it is also possible to program two different sets of parameters and, through an external command, to switch from one set to the other.
This function is useful, for example, when there is an emergency source (generator) in the system, only supplying voltage in the case of a power loss on the network side.

Zone selectivity

The **zone selectivity**, which is applicable to protection functions S and G, can be enabled in the case where the curve with fixed time is selected and the auxiliary power supply is present.
This type of selectivity allows shorter trip times for the circuit-breaker closest to the fault than in the case of time-selectivity.
It is a type of selectivity suitable for radial nets.
The word zone is used to refer to the part of an installation between two circuit-breakers in series. The fault zone is the zone immediately on the load side of the circuit-breaker that detects the fault. Each circuit-breaker that detects a fault communicates this to the circuit-breaker on the supply side by using a simple communication wire. The circuit-breaker that does not receive any communication from those on the load side will launch the opening command within the set selectivity time (40÷200ms).

We have to consider that the circuit-breakers receiving a signal from another trip unit will operate according to the set time t_2.

If, for any reason, when the “selectivity time” has elapsed, the circuit-breaker delegated to opening has not opened, it makes the locking signal towards the other circuit-breakers cease to eliminate the fault.

To realize correctly the zone selectivity the following settings are suggested:

S	t2 ≥ selectivity time + t opening
I	I3 = OFF
G	t4 ≥ selectivity time + t opening
Selectivity time	same setting for each circuit-breaker

Primary and secondary distribution

Selective protection

To carry out the cabling, a shielded twisted pair cable (not supplied; ask ABB for information) can be used. The shield should only be earthed on the trip unit of the circuit-breaker on the supply side. The maximum length of the cabling for zone selectivity, between two units, is 300 meters. The maximum number of the circuit-breakers which can be connected to the outputs (Z out) of a trip unit is 20.

All Emax circuit-breakers in versions B-N fitted with PR332/P and PR333/P trip units allow zone selectivity to be realised.

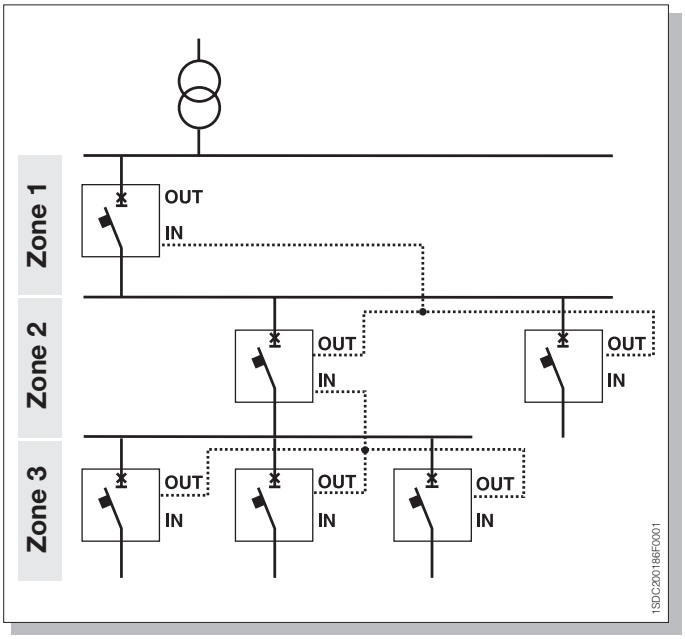

Note
With regard to selectivity in the case of earth faults with circuit-breakers in series, see page **5**/7.

5

Primary and secondary distribution

Back-up protection

Back-up protection is required by the IEC 60364-4-43 Standards and Annex A of the IEC 60947-2 Standard, which allow the use of a protection device with breaking capacity lower than the prospective short-circuit current at the points where it is installed, provided that there is another protection device on the supply side with the necessary breaking capacity. In this case, the characteristics of the two devices must be coordinated in such a way that the specific energy let through by the combination is not higher than that which can be withstood without damage by the device on the load side, and by the protected conductors.

It is necessary to choose switchgear combinations that have been verified by laboratory tests for this type of protection. The possible combinations are specified in ABB SACE documents and PC programs (coordination tables, slide rule kits, DOCWin, etc.).

Back-up protection is used in electrical installations in which there is no essential need for continuous operation: when the supply-side circuit-breaker opens, it also excludes loads that are not affected by the fault.

Furthermore, use of this type of coordination allows a reduction in the size of the installation and therefore limitation of the costs.

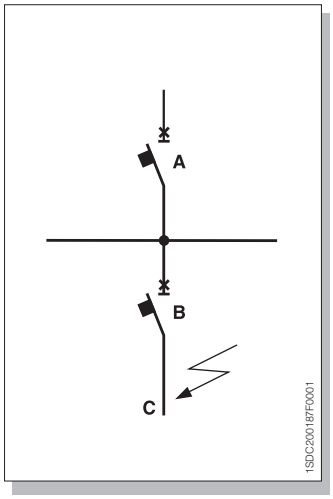

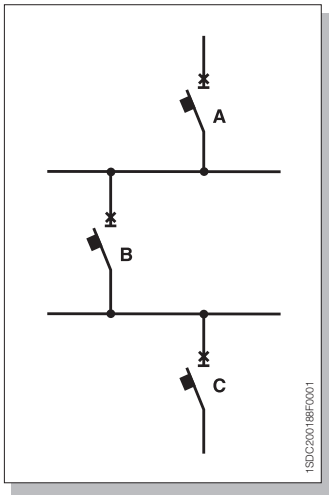

Note

Back-up protection can also be implemented on more than two levels: the figure above shows an example of coordination on three levels. In this case, the choices are correct if at least one of the two situations below is satisfied:

- the circuit-breaker furthest on the supply side A is coordinated with both circuit-breakers B and C (coordination between circuit-breakers B and C is not necessary);
- each circuit-breaker is coordinated with the circuit-breaker immediately to the load side of it, i.e. the circuit-breaker furthest to the supply side A is coordinated with the next one B, which is in turn coordinated with circuit-breaker C.

Directional protection

Directional protection is based on the ability to correlate the circuit-breaker's behavior with the direction of the fault current.
Two different trip times can be set on the PR333/P trip unit depending on the current direction:
– a time (t7Fw) for a direction of current concordant (Fw) with the reference direction set;
– a time (t7Bw) for a direction of current discordant (Bw) with the reference direction set.

A current threshold only (I7) can be set on the PR333/P trip unit.
If the fault current is discordant (Bw) with the reference direction, the protection shall trip when the threshold I7 is reached within the set time t7Bw (provided that the functions S and I have not been set as to intervene before function D).
If the fault current is concordant (Fw) with the reference direction, the protection shall intervene when the threshold I7 is reached within the set time t7Fw (provided that the functions S and I have not been set as to intervene before function D).
Moreover, if function I is active and the short-circuit current exceeds the set value I3, the circuit-breaker will trip nstantaneously independently of the direction of the current.
The reference direction set by ABB is from the top of the circuit-breaker (the zone where the trip unit is located) towards the bottom.

Zone selectivity D (Directional Zone Selectivity)

Thanks to this function, it is also possible to obtain selectivity in meshed and ring networks. By means of zone selectivity with function D "Zone selectivity D", which can only be set to [On] when zone selectivity "S" and "G" are set to [Off] and there is an auxiliary power supply, it is possible to coordinate the behaviour of the various PR333/P devices, by cabling the trip unit buses in a suitable way.
In fact, each trip unit has 4 signals available:
– two input signals (one in a concordant and one in a discordant direction) by means of which the release receives the "block" signal from other releases
– two output signals (one in a concordant and one in a discordant direction) by means of which the trip unit sends a "block" signal to other trip units.
The circuit-breakers which do not receive a "block" signal (coordinated in the direction of the current) will send the opening command within a time equal to "t7sel".
The circuit-breakers which receive the "block" signal will open within the t7Fw or t7Bw time according to the direction of the current.
If function I is activated and the short-circuit current exceeds the set value (I3), the circuit-breaker will open instantaneously and independently of the directions and of the signals received.
For safety reasons, the maximum duration of the "block" signal is 200ms.
If, after this time and for any reason, the circuit-breakers due to trip have not yet opened, the "block" signal falls on the other circuit-breakers which will command immediate opening.
A shielded twisted pair cable (not supplied; ask ABB for information) can be used to carry out the cabling.

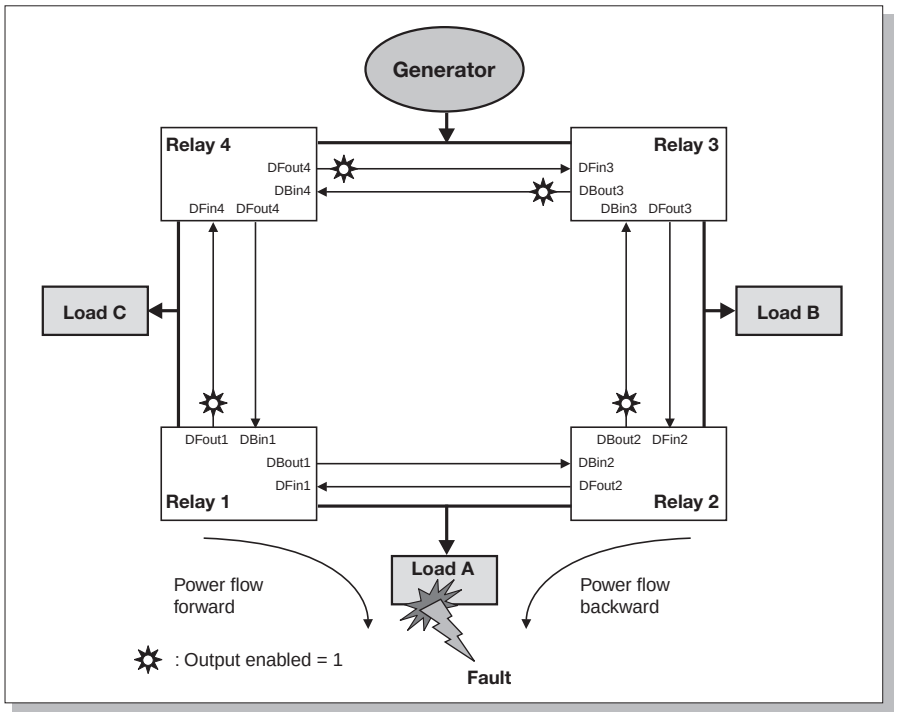

Earth fault protection

Circuit-breakers with protection G

Circuit-breakers fitted with trip units offering earth fault protection function G are usually used in MV/LV distribution substations to protect both the transformers and the distribution lines.
Protection function G calculates the vectorial sum of the currents detected by the current transformers on the phases and on the neutral conductor.
In a sound circuit, this sum, which is called residual current, is equal to zero, whereas in the presence of an earth fault it has a value depending on the fault ring involved.

Use of the toroid on the star center of the transformer

In the case of circuit-breakers to protect MV/LV transformers, it is possible to install a toroid on the conductor connecting the star centre of the transformer to earth (with the PR332/P and PR333/P). This detects the earth fault current.
The figure beside shows the connection diagram of the toroid installed on the star center of the transformer.

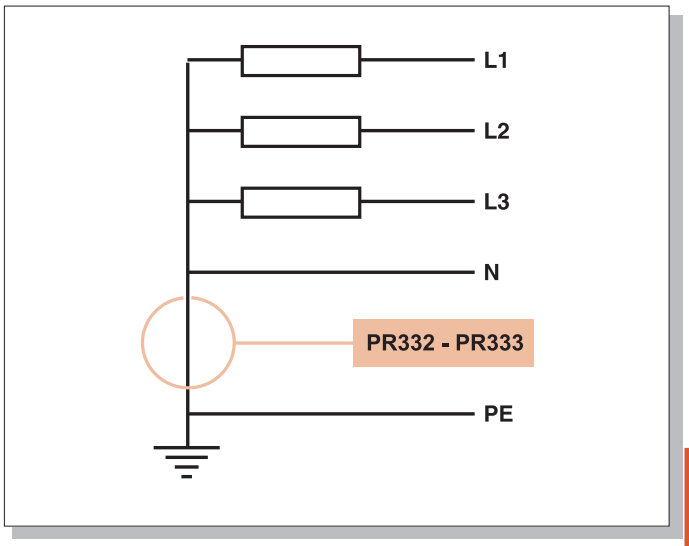

Double G

The Emax type circuit-breakers, equipped with the PR333/P electronic trip unit, allow two independent curves for protection G: one for the internal protection (function G without external toroid) and one for the external protection (function G with external toroid, as described in the above paragraph).
A typical application of function double G consists in simultaneous protection both against earth fault of the secondary of the transformer and of its connection cables to the circuit-breaker terminals (restricted earth fault protection), as well as against earth faults on the load side of the circuit-breaker (outside the restricted earth fault protection).

Residual current protection

The Emax circuit-breakers can be equipped with an external toroid mounted on the rear of the circuit-breaker so that protection against earth faults and indirect contacts is guaranteed.
In particular, the electronic trip unit types able to perform this function are:

- PR332/P LSIRc
- PR332/P LSIG - with “Measuring” module PR330/V and Rating Plug Rc
- PR333/P LSIG - with Rating Plug Rc.

Switching and protection of transformers

General information

When choosing circuit-breakers to protect the LV side of MV/LV transformers, the following must basically be taken into account:

- the rated current of the protected transformer on the LV side, on which the circuit-breaker capacity and protection settings both depend;
- the maximum short-circuit current at the point of installation, which determines the minimum breaking capacity that must be offered by the protection device.

Switching and protection of transformers Sk=750MVA Vn= 400V

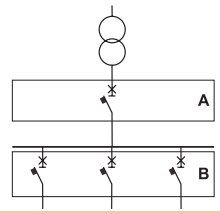

Transformer				Circuit-breaker A (LV side)			Circuit-breaker B (Feeder circuit-breaker)								
S_r	U_k	Transf I_r	Busbar I_b	Transf Feeder I_k	Type	Trip unit	Busbar I_k								
[kVA]	%	[A]	[A]	[kA]		size	[kA]	800 A	1000 A	1250 A	1600 A	2000 A	2500 A	3200 A	4000 A
1x500	4	722	722	17.7	X1B 800	In=800	17.7	X1B800*							
1x630	4	909	909	22.3	X1B 1000	In=1000	22.3	X1B800*							
1x800	5	1155	1155	22.6	X1B 1250	In=1250	22.6	X1B800*							
1x1000	5	1443	1443	28.1	X1B 1600	In=1600	28.1	X1B800*	X1B1000*	X1B1250*					

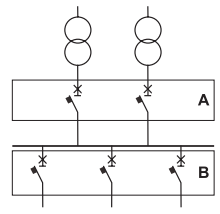

Transformer				Circuit-breaker A (LV side)			Circuit-breaker B (Feeder circuit-breaker)								
S_r	U_k	Transf I_r	Busbar I_b	Transf Feeder I_k	Type	Trip unit	Busbar I_k								
[kVA]	%	[A]	[A]	[kA]		size	[kA]	800 A	1000 A	1250 A	1600 A	2000 A	2500 A	3200 A	4000 A
2x500	4	722	1444	17.5	X1B 800	In=800	35.9	X1B800*							
2x630	4	909	1818	21.8	X1B 1000	In=1000	43.6	X1N800*	X1N1000*	X1N1250*	X1N1600*				
2x800	5	1155	2310	22.1	X1B 1250	In=1250	44.3	X1N800*	X1N1000*	X1N1250*	X1N1600*	E2N2000			
2x1000	5	1443	2886	27.4	X1B 1600	In=1600	54.8	X1N800*	X1N1000*	X1N1250*	X1N1600*	E2N2000	E3N2500		

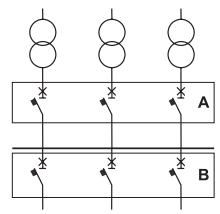

Transformer				Circuit-breaker A (LV side)			Circuit-breaker B (Feeder circuit-breaker)								
S_r	U_k	Transf I_r	Busbar I_b	Transf Feeder I_k	Type	Trip unit	Busbar I_k								
[kVA]	%	[A]	[A]	[kA]		size	[kA]	800 A	1000 A	1250 A	1600 A	2000 A	2500 A	3200 A	4000 A
3x630	4	909	2727	42.8	X1N 1000	In=1000	64.2	X1N800*	X1N1000*	X1N1250*	X1N1600*	E2N2000	E3N2500		
3x800	5	1155	3465	43.4	X1N 1250	In=1250	65	X1N800*	X1N1000*	X1N1250*	X1N1600*	E2N2000	E3N2500		
3x1000	5	1443	4329	53.5	X1N 1600	In=1600	80.2	E2S800*	E2S1000*	E2S1250*	E2S1600*	E2S2000	E3H2500	E3H3200	

WARNING!

The information for selecting the circuit-breakers is provided only in relation to the operating current and prospective short-circuit current. To make the correct selection, other factors such as selectivity, back-up protection, the decision to use current-limiting circuit-breakers, etc. have to be considered. It is therefore essential for designers to carry out precise verification.
The types of circuit-breakers proposed are all from the SACE Emax series. Positions marked by an asterisk (*) are suitable for other possible selections from the Tmax series of moulded-case circuit-breakers. One also needs to bear in mind that the short-circuit currents shown in the table have been calculated on the assumption of 750MVA power on the supply side of the transformers and without taking into account the impedances of the busbars and of the connections to the circuit-breakers.

Switching and protection of transformers Sk=750MVA Vn= 690V

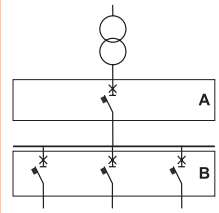

Transformer				Circuit-breaker A (LV side)			Circuit-breaker B (Feeder circuit-breaker)									
S_r	U_k	Transf I_r	Busbar I_b	Transf Feeder I_k	Type	Trip unit	Busbar I_k									
[kVA]	%	[A]	[A]	[kA]		size	[kA]	400A	630A	800 A	1000 A	1250 A	1600 A	2000 A	2500 A	3200 A
1x500	4	418	418	10.3	X1B 630	In=630	10.3	X1B630*								
1x630	4	527	527	12.9	X1B 630	In=630	12.9	X1B630*								
1x800	5	669	669	13.1	X1B 800	In=800	13.1	X1B630*	X1B630*							
1x1000	5	837	837	16.3	X1B 1000	In=1000	16.3	X1B630*	X1B630*	X1B800*						
1x1250	5	1046	1046	20.2	X1B 1250	In=1250	20.2	X1B630*	X1B630*	X1B800*						
1x1600	6.25	1339	1339	20.7	X1B 1600	In=1600	20.7	X1B630*	X1B630*	X1B800*	X1B1000*	X1B1250*				

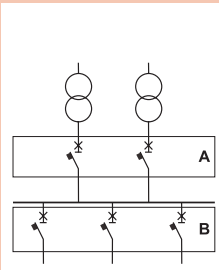

Transformer				Circuit-breaker A (LV side)			Circuit-breaker B (Feeder circuit-breaker)									
S_r	U_k	Transf I_r	Busbar I_b	Transf Feeder I_k	Type	Trip unit	Busbar I_k									
[kVA]	%	[A]	[A]	[kA]		size	[kA]	400A	630A	800 A	1000 A	1250 A	1600 A	2000 A	2500 A	3200 A
2x500	4	418	837	10.1	X1B630	In=630	20.2	X1B630*	X1B630*							
2x630	4	527	1054	12.6	X1B630	In=800	25.3	X1B630*	X1B630*	X1B800*						
2x800	5	689	1339	12.6	X1B800	In=800	25.7	X1B630*	X1B630*	X1B800*	X1B1000*					
2x1000	5	837	1673	15.9	X1B1000	In=1000	31.8	X1B630*	X1B630*	X1B800*	X1B1000*	X1B1250*				
2x1250	5	1046	2092	19.6	X1B1250	In=1250	39.2	X1B630*	X1B630*	X1B800*	X1B1000*	X1B1250*	X1B1600*			
2x1600	6.25	1339	2678	20.1	X1B1600	In=1600	40.1	X1B630*	X1B630*	X1B800*	X1B1000*	X1B1250*	X1B1600*	E2B2000		

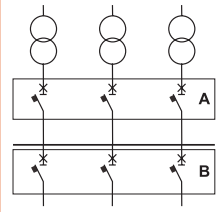

Transformer				Circuit-breaker A (LV side)			Circuit-breaker B (Feeder circuit-breaker)									
S_r	U_k	Transf I_r	Busbar I_b	Transf Feeder I_k	Type	Trip unit	Busbar I_k									
[kVA]	%	[A]	[A]	[kA]		size	[kA]	400A	630A	800 A	1000 A	1250 A	1600 A	2000 A	2500 A	3200 A
3x630	4	527	1581	24.8	X1B630	In=630	37.2	X1B630*	X1B630*	X1B800*	X1B1000*	X1B1250*				
3x800	5	669	2008	25.2	X1B800	In=800	37.7	X1B630*	X1B630*	X1B800*	X1B1000*	X1B1250*	X1B1600*			
3x1000	5	837	2510	31.0	X1B1000	In=1000	46.5	X1N630*	X1N630*	X1N800*	X1N1000*	X1N1250*	X1N1600*	E2N2000		
3x1250	5	1046	3138	38.0	X1B1250	In=1600	57.1	E2S800*	E2S800*	E2S800	E2S1000*	E2S1200	E2S1600	E2S2000	E3N2500	
3x1600	6.25	1339	4016	38.9	X1B1600	In=1600	58.3	E2S800*	E2S800*	E2S800	E2S1000*	E2S1200	E2S1600	E2S2000	E3N2500	E3N3200

WARNING!

The information for selecting the circuit-breakers is provided only in relation to the operating current and prospective short-circuit current. To make the correct selection, other factors such as selectivity, back-up protection, the decision to use current-limiting circuit-breakers, etc. have to be considered. It is therefore essential for designers to carry out precise verification.
The types of circuit-breakers proposed are all from the SACE Emax series. Positions marked by an asterisk (*) are suitable for other possible selections from the Tmax series of moulded-case circuit-breakers. One also needs to bear in mind that the short-circuit currents shown in the table have been calculated on the assumption of 750MVA power on the supply side of the transformers and without taking into account the impedances of the busbars and of the connections to the circuit-breakers.

Switching and protection of generators

Emax circuit-breakers are suitable for use with low-voltage generators employed in the following applications:

A - back-up generators for primary loads
B - generators disconnected from the supply network
C - generators for small power stations connected in parallel with other generators and, possibly, with the power supply network.

In cases A and B, the generator does not operate in parallel with the power supply network: the short-circuit current therefore depends on the generator itself and, possibly, on the connected loads.
In case C, the breaking capacity must be determined by assessing the short-circuit current imposed by the network at the point of circuit-breaker installation.
The main points to check for generator protection are:

– the short-circuit current delivered by the generator; this can only be assessed if one is familiar with the machine's typical reactance and time constants. Here one can simply note that low short-circuit protection device settings are normally required (2-4 times In);
– the thermal overload limit of the machine. According to the IEC 60034-1 Standard, this value is set at 1.5xIn for a period of 30 seconds for generators up to 1200 MVAr.

Reverse power protection RP

The reverse power protection is tripped when active power is incoming to the generator rather than outgoing as it is under normal conditions. Power reversal takes place if the mechanical power supplied by the main motor driving the generator drops sharply. In this condition, the generator acts as a motor, and can cause serious damage to the prime movers, such as overheating in steam turbines, cavitation in hydraulic turbines, or explosions of uncombusted diesel fuel in diesel engines.

Switching and protection of capacitors

Operating conditions of circuit-breakers during continuous service for capacitor banks

According to the IEC 60831-1 and 60931-1 Standards, capacitors must be able to operate in service conditions with a rated rms current of up to 1.3 times the rated current Icn of the capacitor. This prescription is due to the possible presence of harmonics in the mains voltage.
It should also be kept in mind that a tolerance of +15% is admissible for the capacitance value corresponding to its rated power, so that the circuit-breakers for switching capacitor banks must be selected to permanently carry a maximum current equal to:
In = 1.3 x 1.15 x Inc = 1.5 x Inc.

Table for selecting the protection and switching circuit-breakers for capacitors

The breaking capacity of the circuit-breaker must take into account the prospective short-circuit current at the point of installation. The available sizes are shown in the table.

Maximum power of the capacitor bank at 50Hz [kvar]				Circuit-breaker	Rated current of the current transformer	Rated current of the capacitor bank	Overload protection setting	Short-circuit protection setting
400V	440V	500V	690V	Type	In [A]	Inc [A]	I1 [A]	I3 [A]
578	636	722	997	X1B - X1N	1250	834	1 x In	OFF
739	813	924	1275	X1B - X1N	1600	1067	1 x In	OFF

X1 by Emax

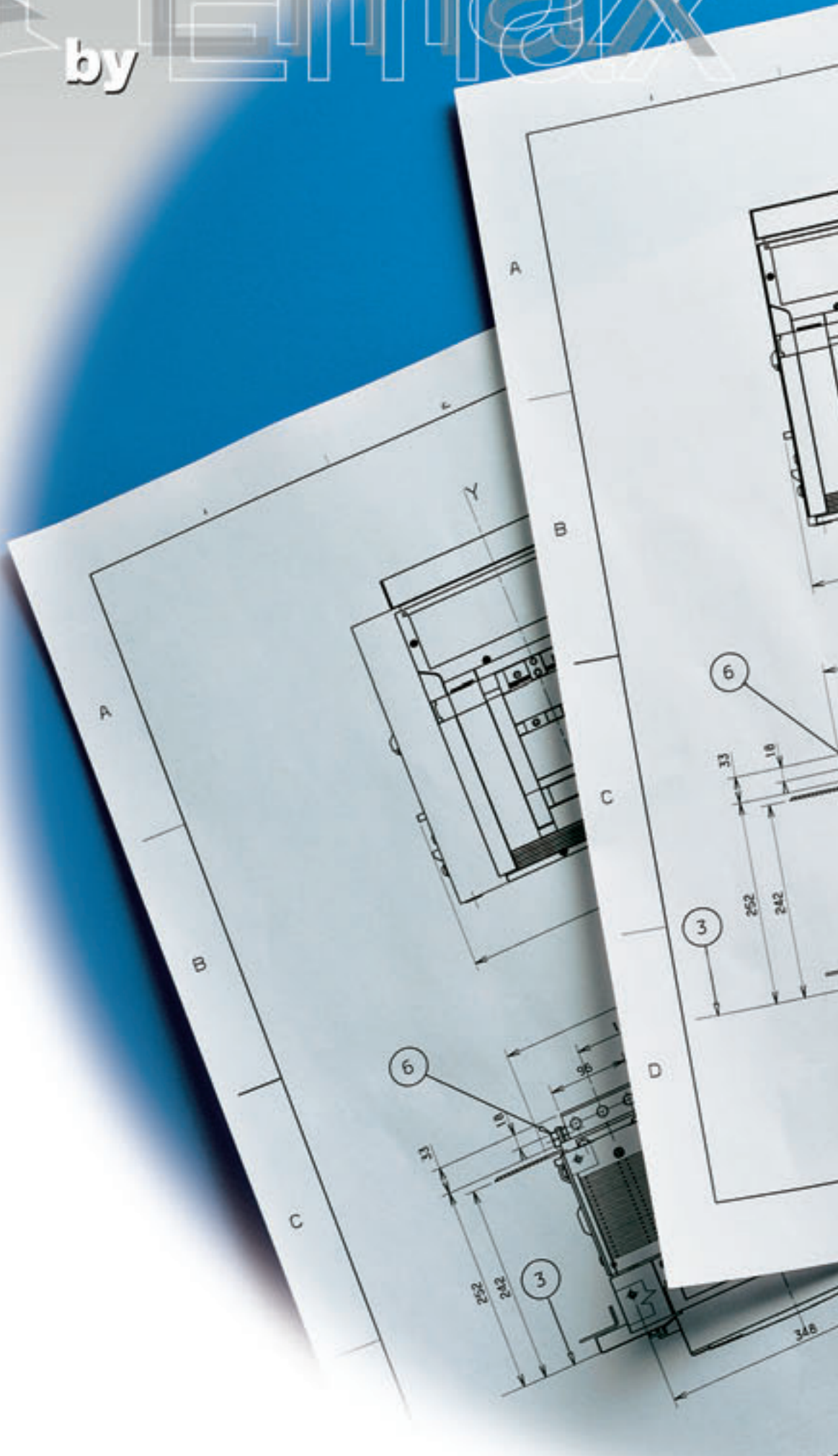

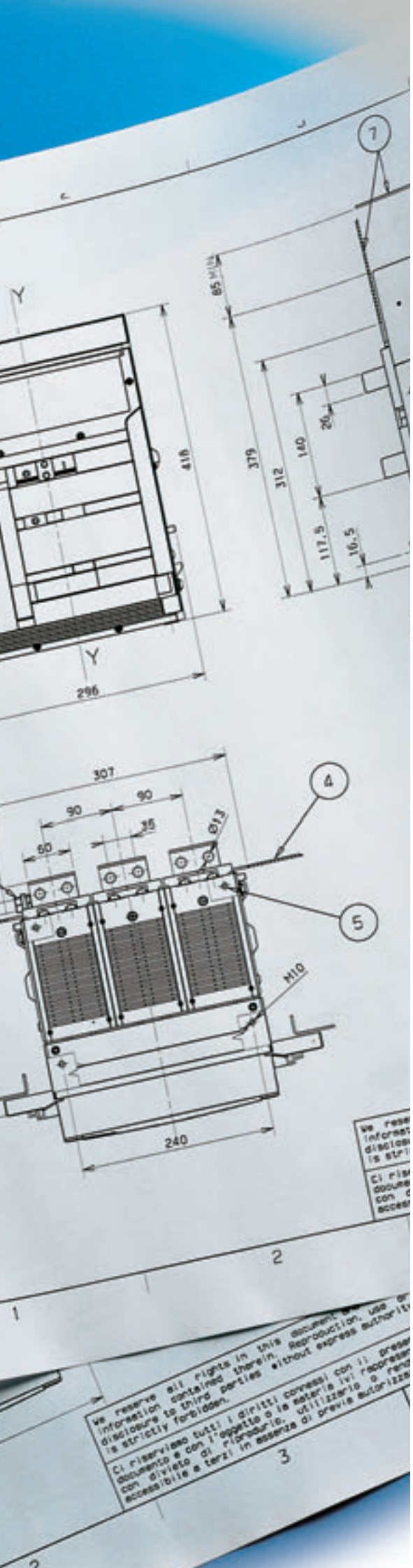

Overall dimensions

Contents

6

Overall dimensions

Fixed circuit-breaker

Basic version with front terminals

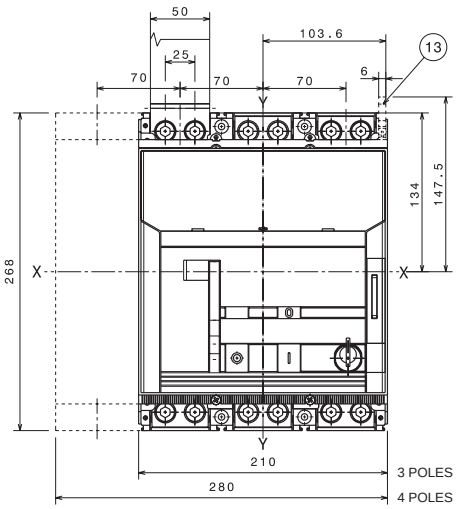

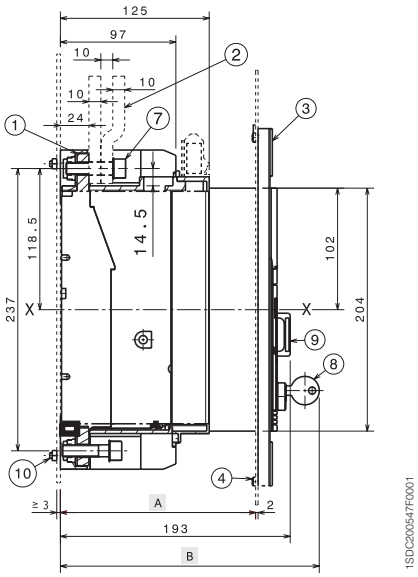

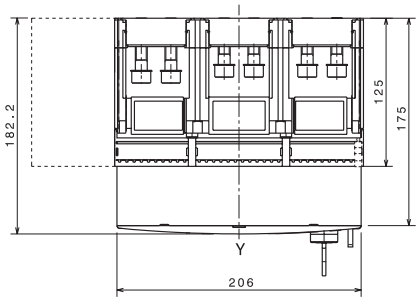

	With flange	Without flange
A	125 ... 164	170

	Standard	Ronis	Profalux	Kirk	Castell
B	208	216	224	245	243

	3 Poles	4 Poles
C	70	140

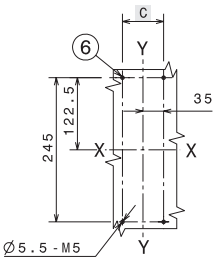

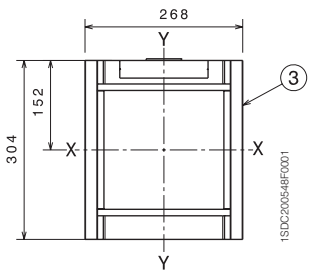

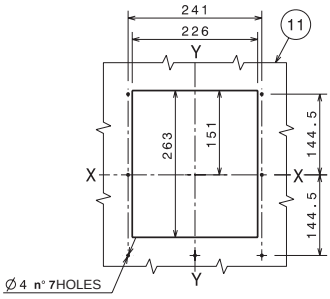

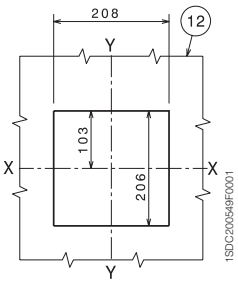

Caption

1. Front terminals
2. Busbars
3. Flange for the compartment door
4. Flange fixing screws
6. Drilling template for fixing onto support sheet
7. Tightening torque 18 Nm
8. Key lock (optional)
9. Padlock (optional)
10. Tightening torque 21 Nm
11. Sheet drilling for compartment door with flange
12. Sheet drilling for compartment door without flange
13. Terminal for auxiliary contacts

Version with front terminals

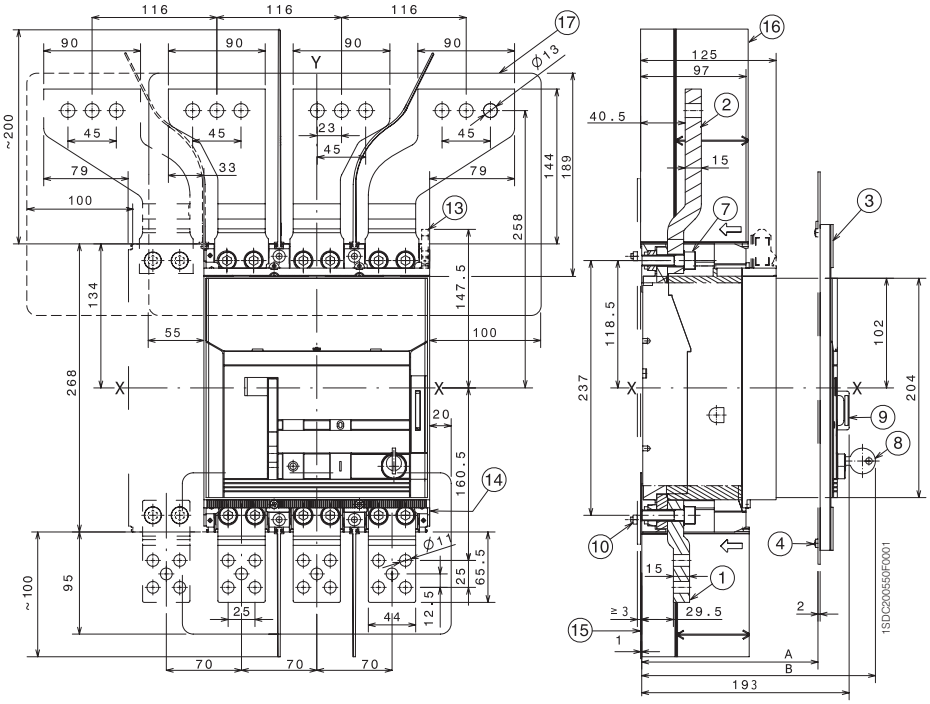

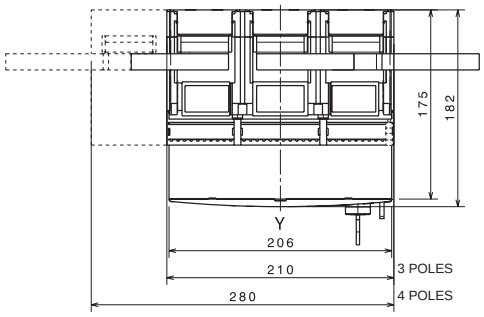

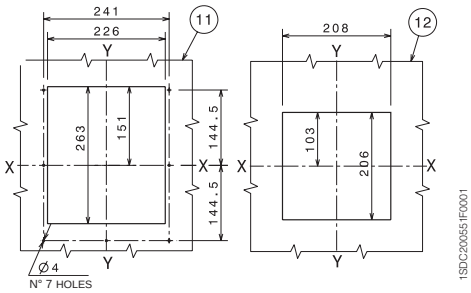

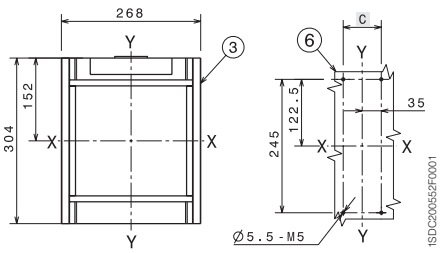

	With flange	Without flange
A	125 ... 164	170

	Standard	Ronis	Profalux	Kirk	Castell
B	208	216	224	245	243

	3 Poles	4 Poles
C	70	140

Caption

1. Extended front terminals
2. Extended front spread terminals
3. Flange for the compartment door
4. Flange fixing screws
6. Drilling template for fixing onto support sheet
7. Tightening torque18 Nm
8. Key lock (optional)
9. Padlock (optional)
10. Tightening torque 2.5 Nm
11. Sheet drilling for compartment door with flange
12. Sheet drilling for compartment door without flange
13. Terminal for auxiliary contacts
14. Protection plate
15. Phase separators 100 mm
16. Phase separators 200 mm
17. Insulation plate not supplied

Overall dimensions

Fixed circuit-breaker

Version with front CuAl cables terminals

Front for CuAl cables - 2x240 mm²

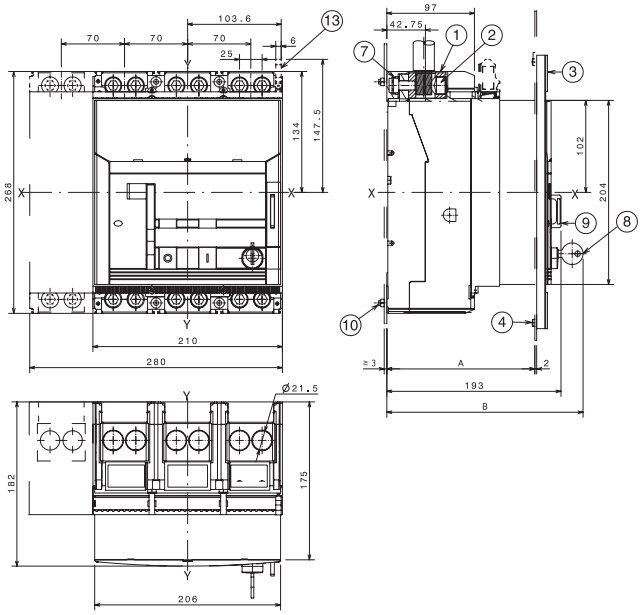

Front for CuAl cables - 4x240 mm²

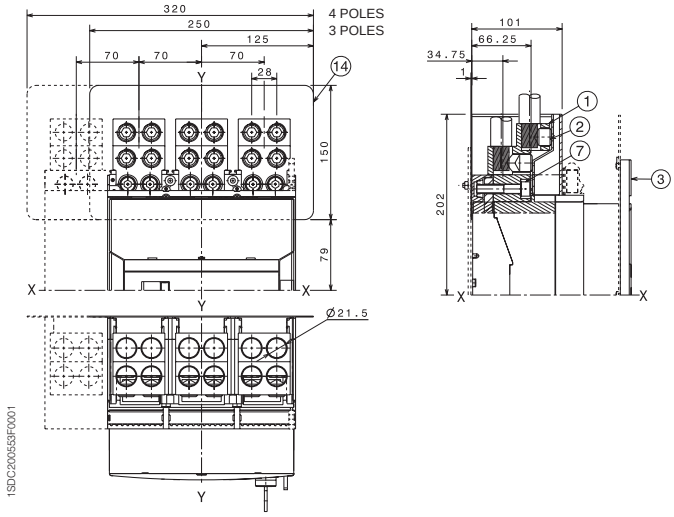

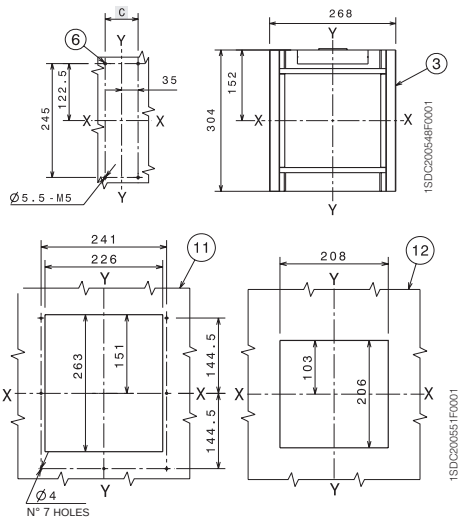

	With flange			Without flange	
A	125 ... 164			170	
	Standard	Ronis	Profalux	Kirk	Castell
B	208	216	224	245	243
	3 Poles			4 Poles	
C	70			140	

Caption

1. Front terminals for CuAl cables
2. Tightening torque 43 Nm
3. Flange for the compartment door
4. Flange fixing screws
6. Drilling template for fixing onto support sheet
7. Tightening torque 18 Nm
8. Key lock (optional)
9. Padlock (optional)
10. Tightening torque 2.5 Nm
11. Sheet drilling for compartment door with flange
12. Sheet drilling for compartment door without flange
13. Terminal for auxiliary contacts
14. Protection plate

Version with rear terminals

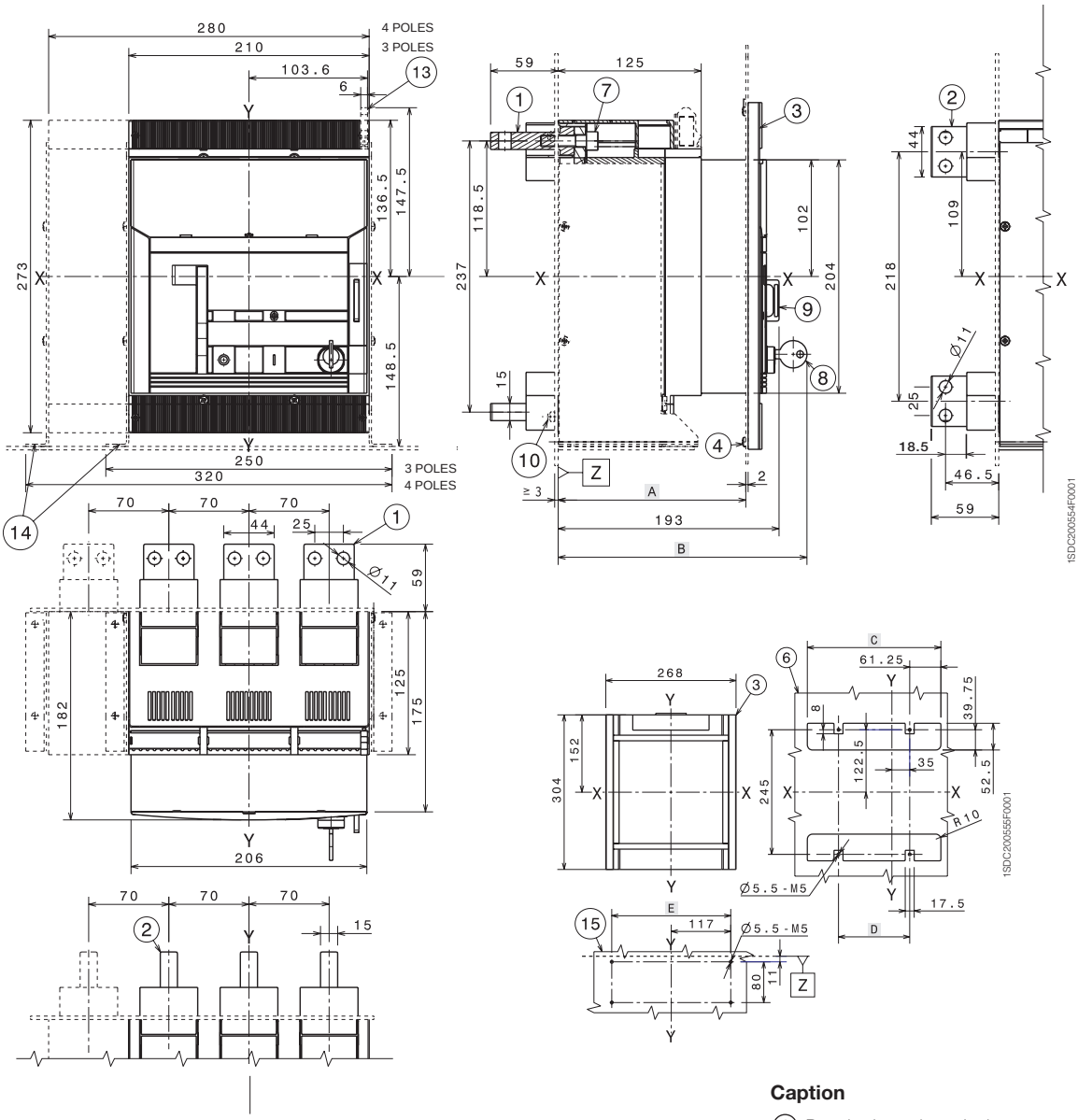

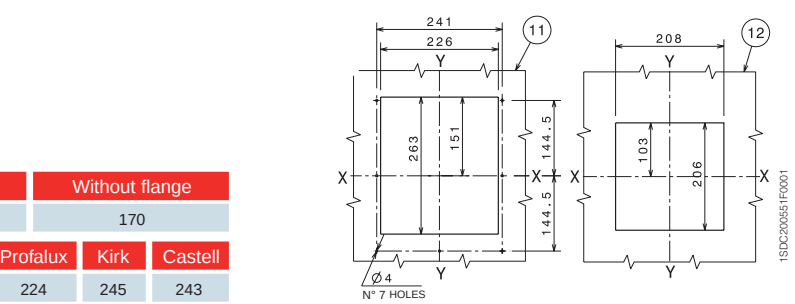

	With flange	Without flange
A	125 ... 164	170

	Standard	Ronis	Profalux	Kirk	Castell
B	208	216	224	245	243

	3 poles	4 poles
C	192.5	262.5
D	70	140
E	234	304

Caption

1. Rear horizontal terminals
2. Rear vertical terminals
3. Flange for the compartment door
4. Flange fixing screws
6. Drilling template for fixing onto support sheet
7. Tightening torque 20 Nm
8. Key lock (optional)
9. Padlock (optional)
10. Tightening torque 2.5 Nm
11. Sheet drilling for compartment door with flange
12. Sheet drilling for compartment door without flange
13. Terminal for auxiliary contacts
14. Fixing shoulders on lower sheet
15. Drilling template for fixing onto lower sheet

Overall dimensions

Fixed circuit-breaker

Version with rear adjustable terminals

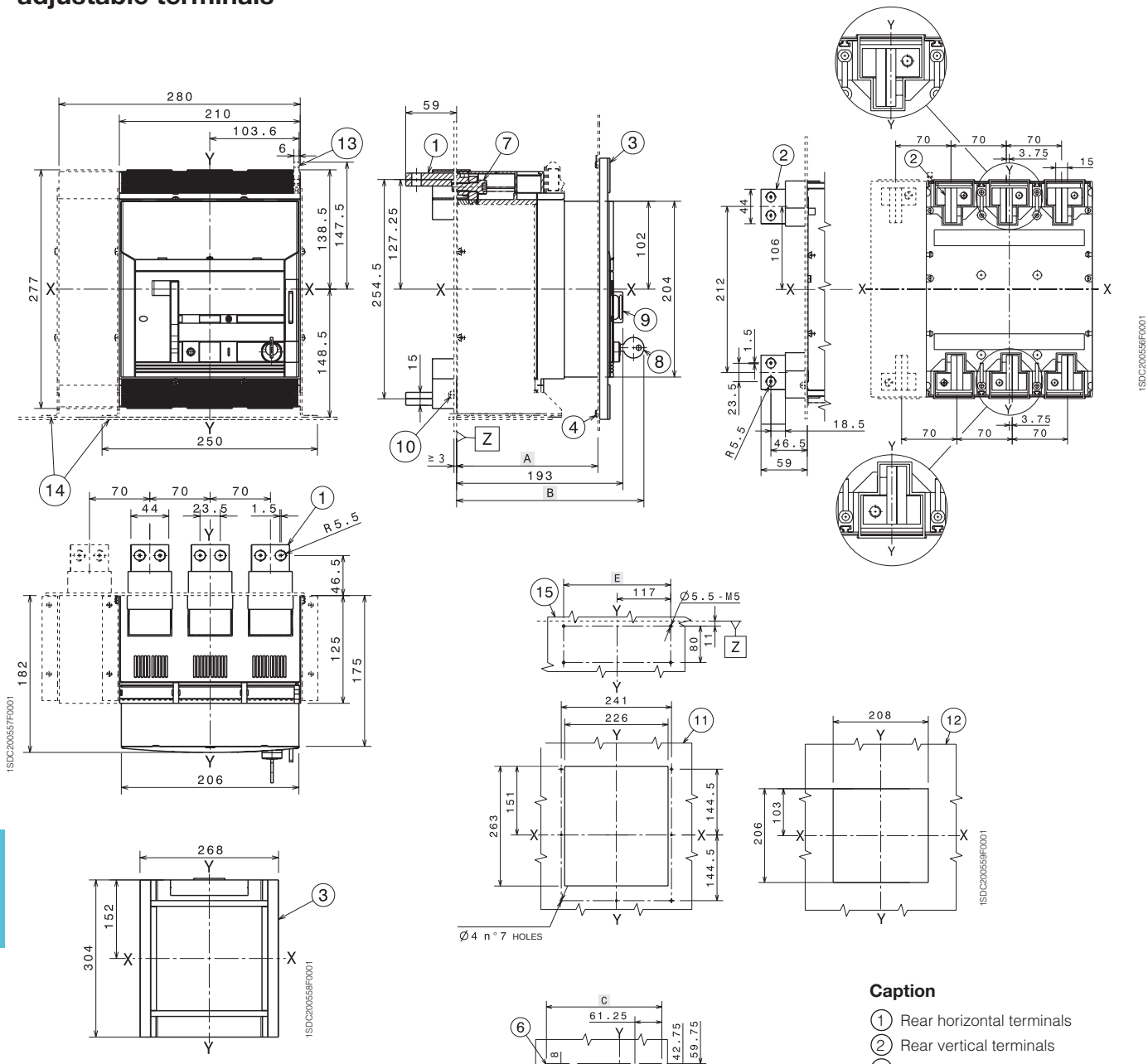

	With flange	Without flange
A	125 ... 164	170

	Standard	Ronis	Profalux	Kirk	Castell
B	208	216	224	245	243

	3 poles	4 poles
C	**192.5**	**262.5**
D	**70**	**140**
E	**234**	**304**

Caption

1. Rear horizontal terminals
2. Rear vertical terminals
3. Flange for the compartment door
4. Flange fixing screws
5. Tightening torque 1.5 Nm
6. Drilling template for fixing onto support sheet
7. Tightening torque 20 Nm
8. Key lock (optional)
9. Padlock (optional)
10. Tightening torque 2.5 Nm
11. Sheet drilling for compartment door with flange
12. Sheet drilling for compartment door without flange
13. Terminal for auxiliary contacts
14. Fixing shoulders on lower sheet
15. Drilling template for fixing onto lower sheet

Overall dimensions

Withdrawable circuit-breaker

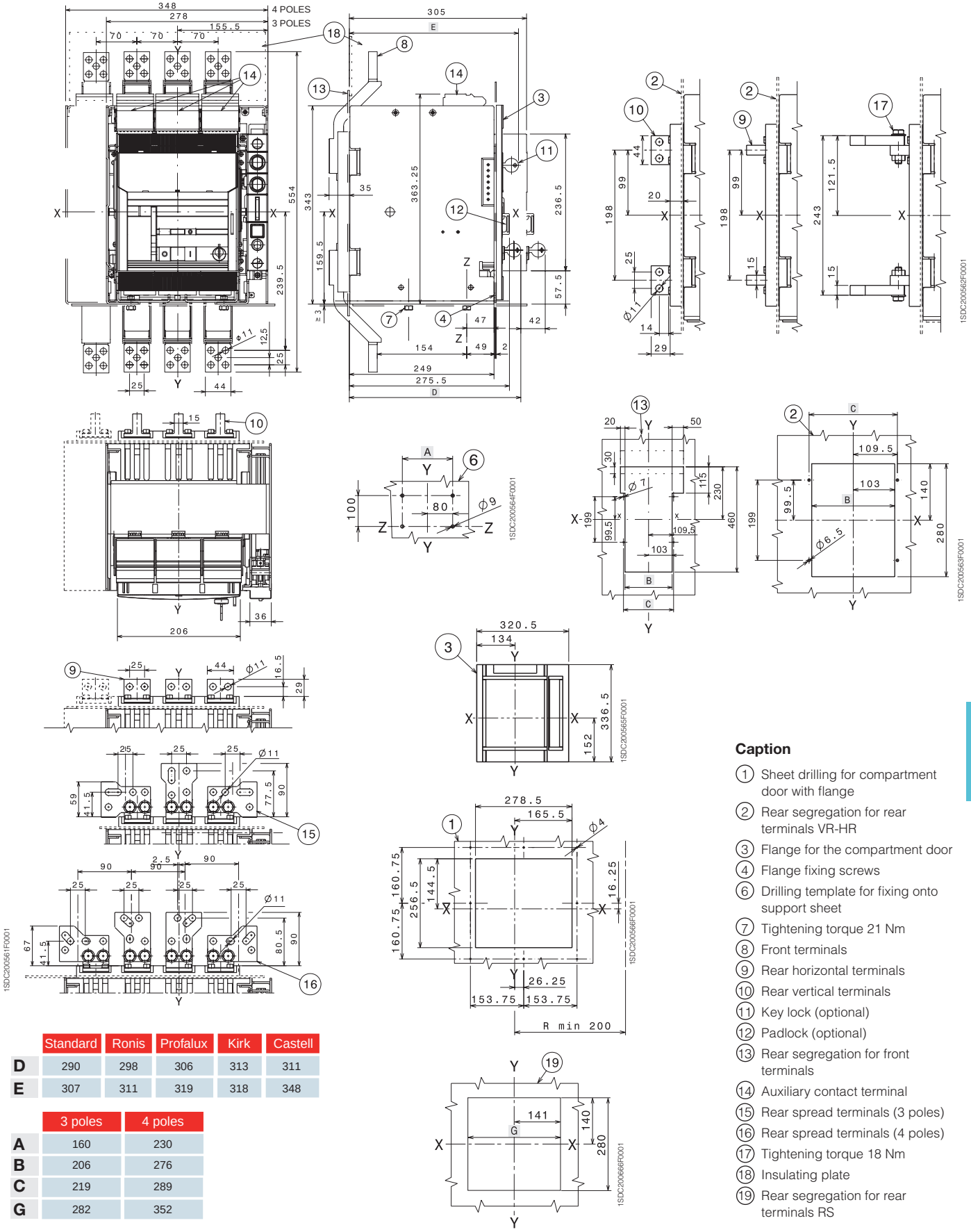

	Standard	Ronis	Profalux	Kirk	Castell
D	290	298	306	313	311
E	307	311	319	318	348

	3 poles	4 poles
A	160	230
B	206	276
C	219	289
G	282	352

Caption

1. Sheet drilling for compartment door with flange
2. Rear segregation for rear terminals VR-HR
3. Flange for the compartment door
4. Flange fixing screws
6. Drilling template for fixing onto support sheet
7. Tightening torque 21 Nm
8. Front terminals
9. Rear horizontal terminals
10. Rear vertical terminals
11. Key lock (optional)
12. Padlock (optional)
13. Rear segregation for front terminals
14. Auxiliary contact terminal
15. Rear spread terminals (3 poles)
16. Rear spread terminals (4 poles)
17. Tightening torque 18 Nm
18. Insulating plate
19. Rear segregation for rear terminals RS

Overall dimensions

Withdrawable circuit-breaker

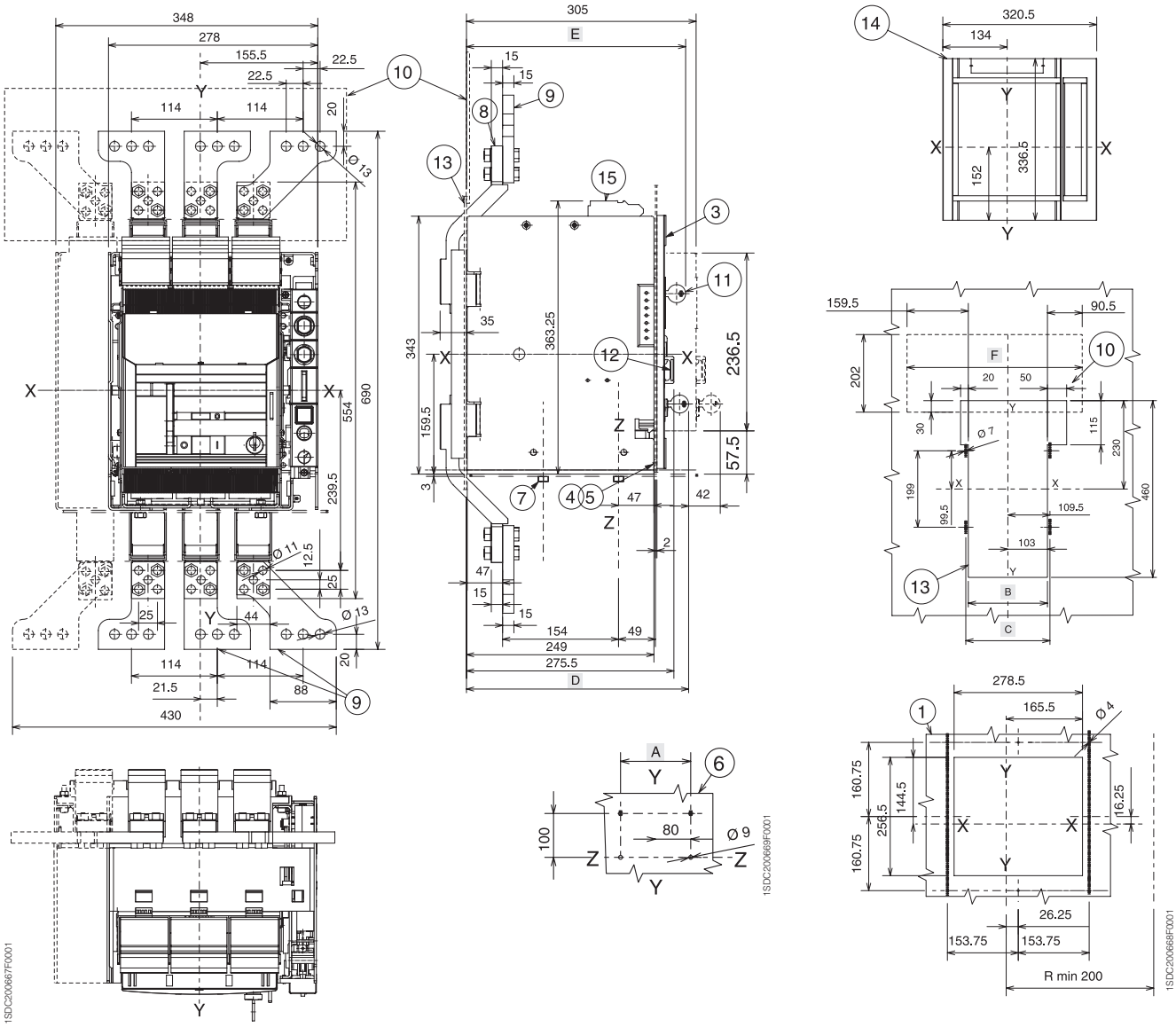

	Standard	Ronis	Profalux	Kirk	Castell
D	290	298	306	313	311
E	307	311	319	318	348

	3 poles	4 poles
A	160	230
B	206	276
C	219	289
F	342	456

Caption

1. Sheet drilling for compartment door with flange
2. Rear segregation for rear terminals
3. Flange for the compartment door
4. Flange fixing screws
6. Drilling template for fixing onto support sheet
7. Tightening torque 9 Nm
8. Front terminal
9. Spread terminal
10. Insulating protection
11. Key lock (optional)
12. Padlock (optional)
13. Rear segregation for front terminals
14. Flange for the compartment door
15. Clamp for auxiliary contacts

Overall dimensions

Mechanical interlock between Emax X1 and Tmax T7 circuit-breakers

Mechanical interlock

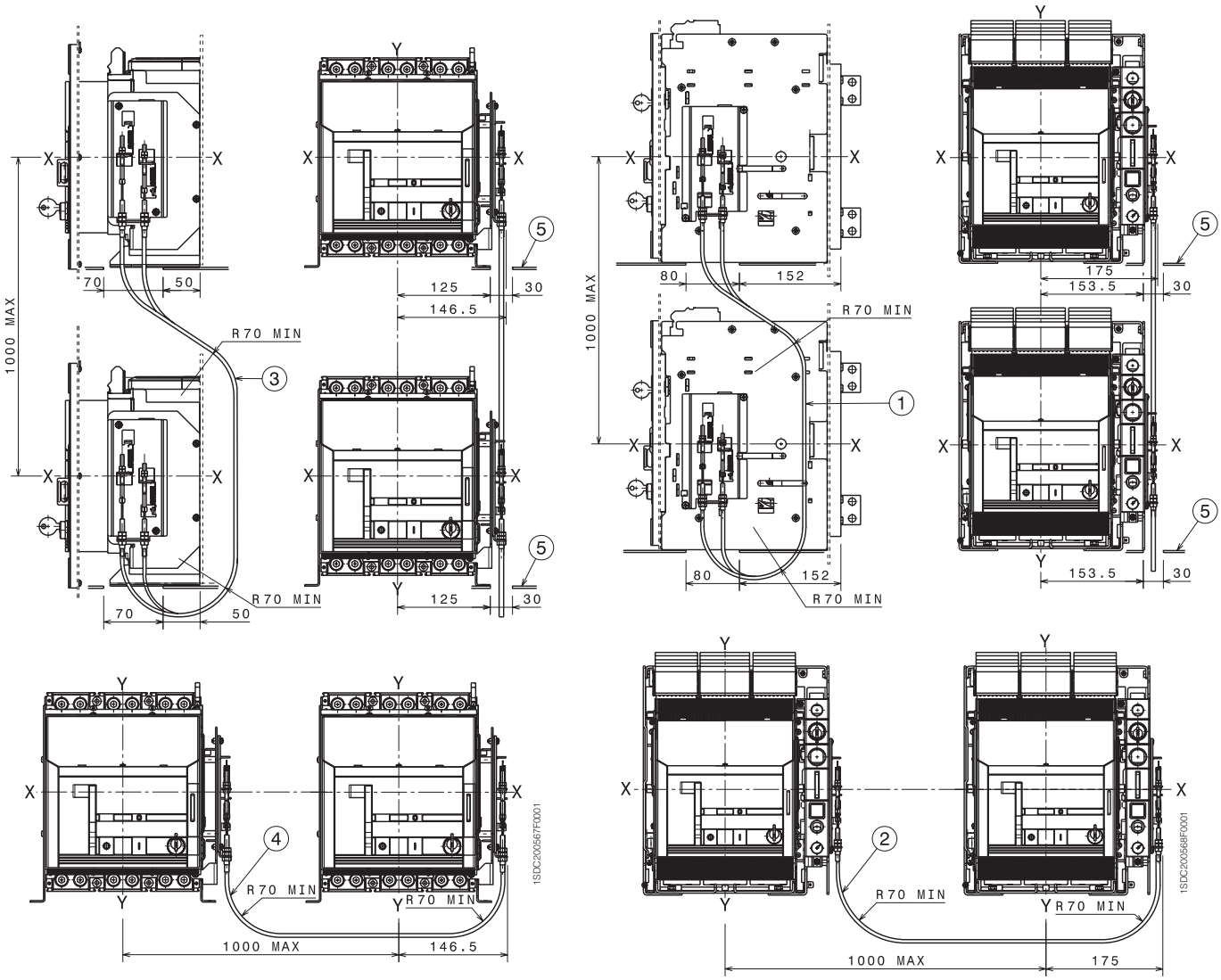

Caption

1. Mechanical vertical interlock for withdrawable circuit-breakers
2. Mechanical horizontal interlock for withdrawable circuit-breakers
3. Mechanical vertical interlock for fixed circuit-breakers
4. Mechanical horizontal interlock for fixed circuit-breakers
5. Sheet drilling for wire passage of the mechanical interlock

Overall dimensions

Mechanical interlock between Emax X1 and Emax E1-E6 circuit-breakers

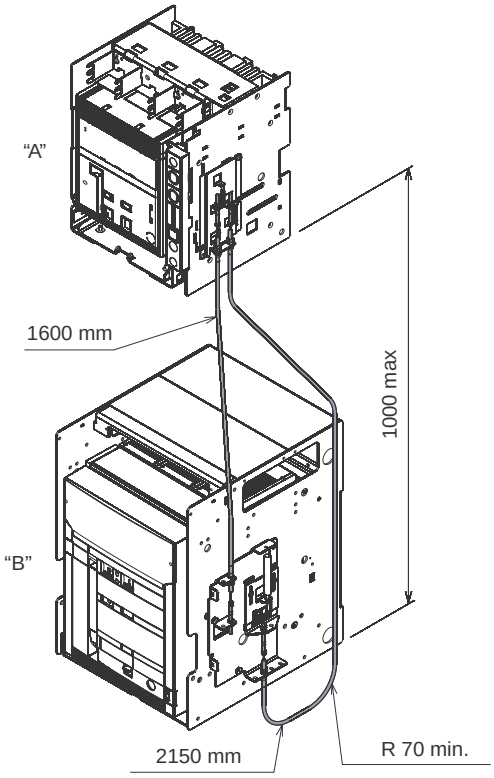

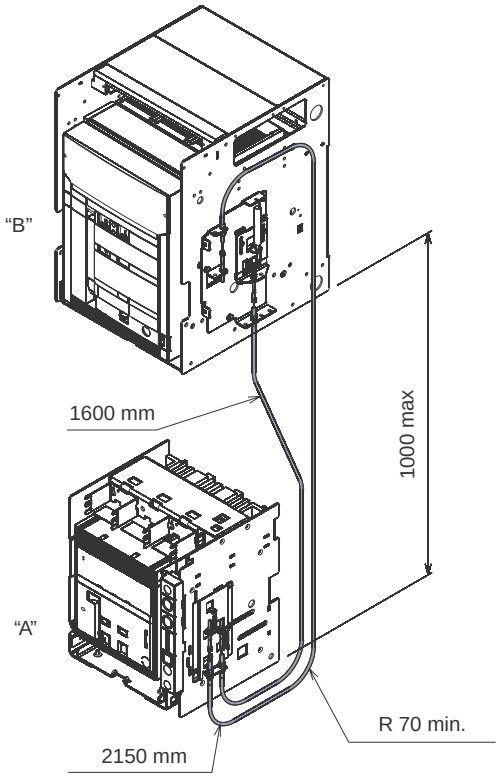

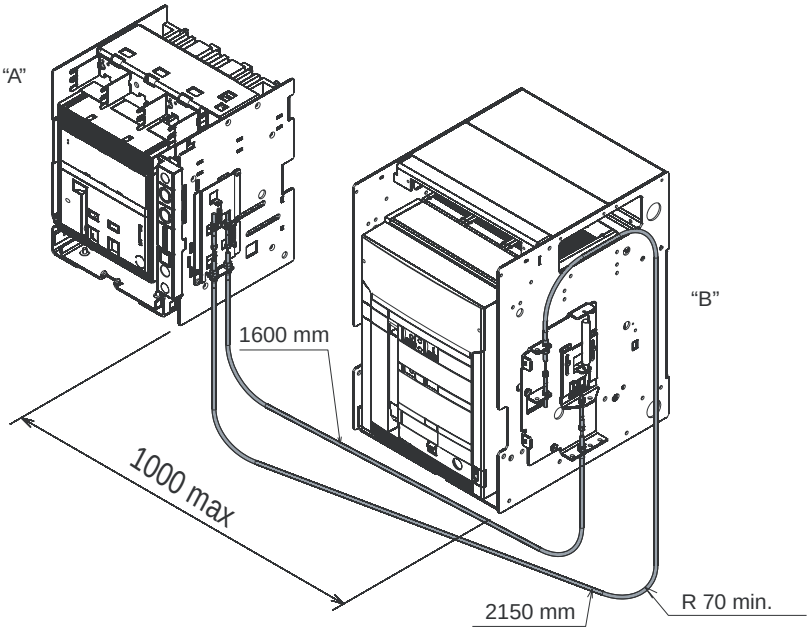

"A" (SX)	"B" (DX)
T7-T7M-X1	E1-E2-E3
E1-E2-E3-E4-E6	T7-T7M-X1

Overall dimensions

Insulation distances

Insulation distances

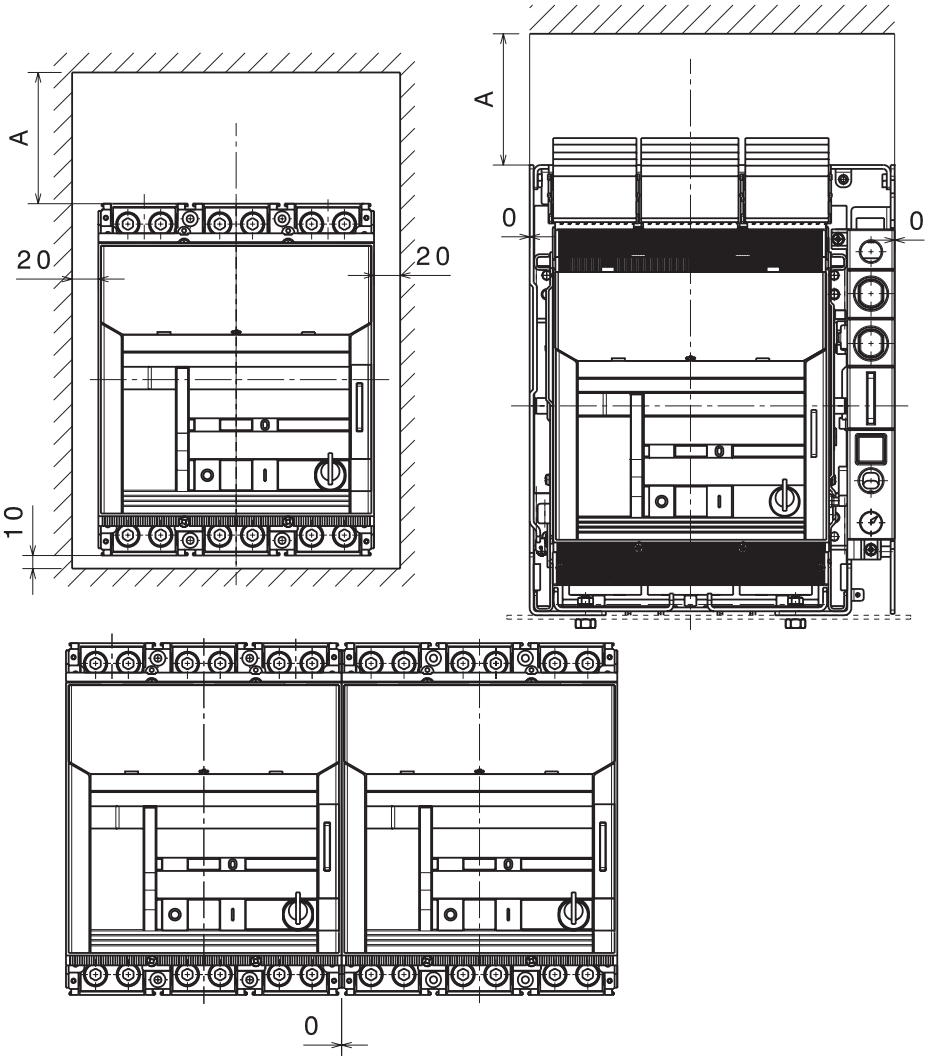

	A
Un<440V	50
440V<Un<690V	100

Note:
Use insulated cables or busbars, or carry out specific type tests on the installation.
For the insulation distances of the 1000V circuit-breakers, please ask ABB SACE.

6

X1 by Emax

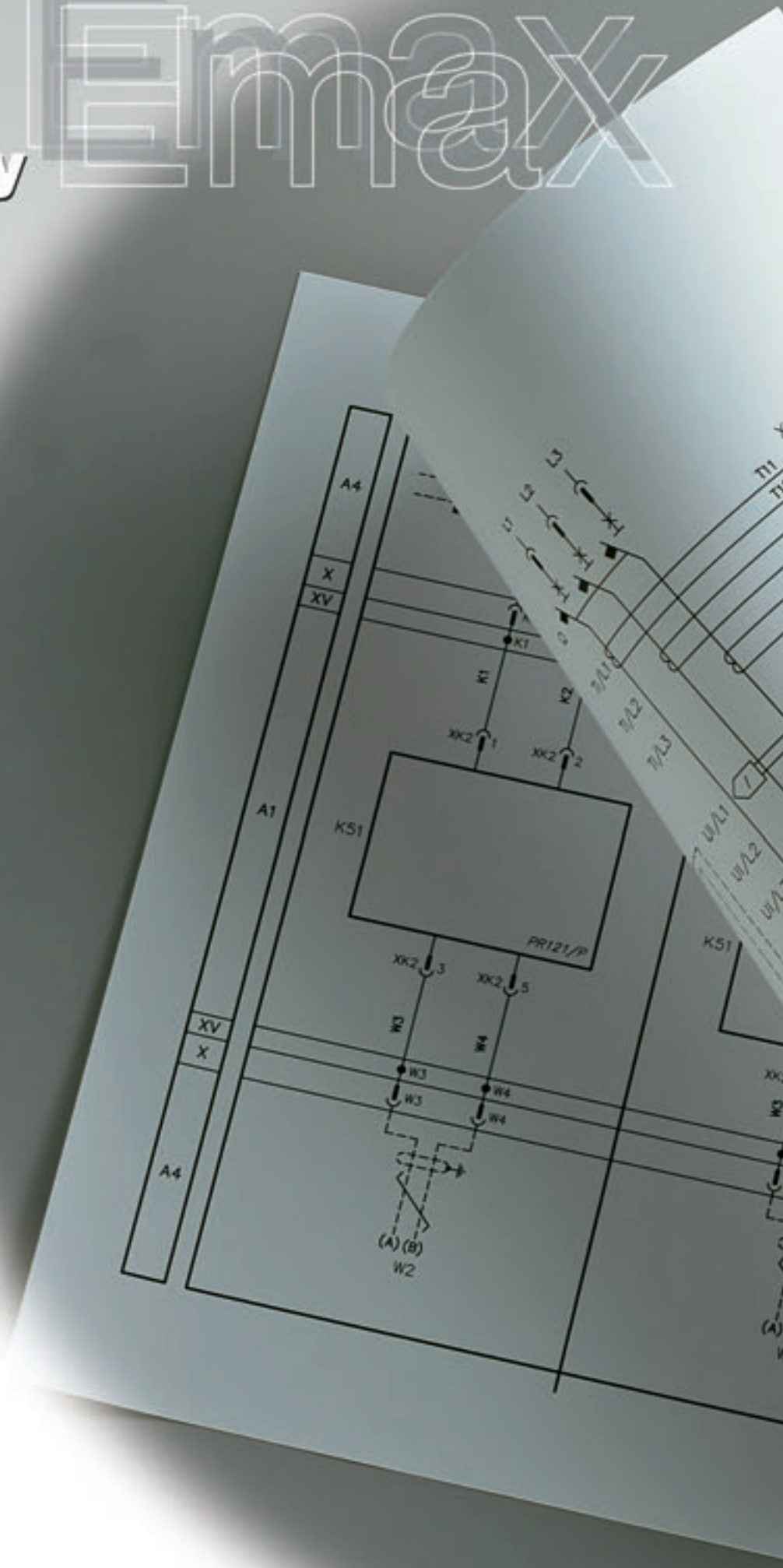

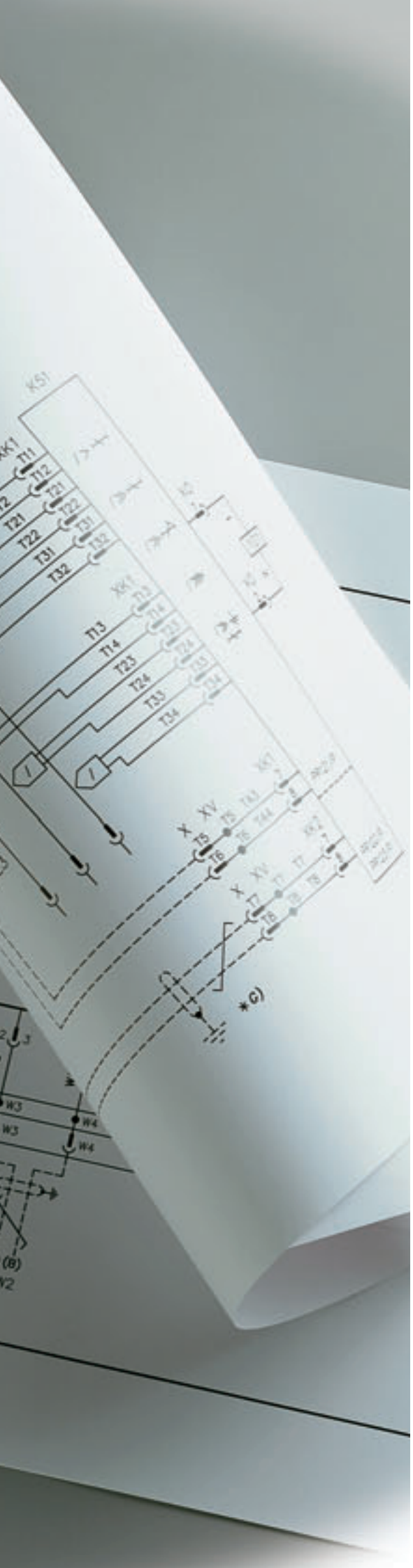

Circuit diagrams

Contents

7

Warning
Before installing the circuit-breaker, carefully read notes F and O on the circuit diagrams.

Operating status shown
The circuit diagram is for the following conditions:
- withdrawable circuit-breaker, open and racked-in
- circuits de-energised
- trip units not tripped
- motor operating mechanism with springs discharged.

Versions
Though the diagram shows a circuit-breaker in withdrawable version, it can be applied to a fixed version circuit-breaker as well.

Fixed version
The control circuits are fitted between terminals XV (connector X12-X13-X14-X15 are not supplied).
With this version, the applications indicated in figure 31A cannot be provided.

Withdrawable version
The control circuits are fitted between the poles of connector X12-X13-X14-X15 (terminal box XV is not supplied).

Version without overcurrent trip unit
With this version, the applications indicated in figures 13A, 14A, 41A, 42A, 43A, 44A, 45A and 62A cannot be provided.

Version with PR331/P electronic trip unit
With this version, the applications indicated in figures 42A, 43A, 44A, 45A cannot be provided.

Version with PR332/P electronic trip unit
With this version, the applications indicated in figure 41A cannot be provided.

Version with PR333/P electronic trip unit
With this version, the applications indicated in figure 41A cannot be provided.

Caption
☐	= Circuit diagram figure number
*	= See note indicated by letter
A1	= Circuit-breaker accessories
A3	= Accessories applied to the fixed part of the circuit-breaker (for withdrawable version only)
A4	= Example switchgear and connections for control and signalling, outside the circuit-breaker
A19	= PR330/R actuation unit
AY	= SOR TEST UNIT Test/monitoring Unit (see note R)
D	= Electronic time-delay device of the undervoltage trip unit, outside the circuit-breaker
K51	= PR331, PR332/P, PR333/P electronic trip unit with the following protection functions (see note G): - L overload protection with inverse long time-delay trip - setting I1 - S short-circuit protection with inverse or definite short time-delay trip - setting I2 - I short-circuit protection with instantaneous time-delay trip - setting I3 - G earth fault protection with inverse short time-delay trip - setting I4
K51/GZin (DBin)	= Zone selectivity: input for protection G or “reverse” direction input for protection D (only with Uaux and PR332/P or PR333/P trip unit)
K51/GZout (DBout)	= Zone selectivity: output for protection G or “reverse” direction output for protection D (only with Uaux. and PR332/P or PR333/P trip unit)
K51/SZin (DFin)	= Zone selectivity: input for protection S or “direct” input for protection D (only with Uaux. and PR332/P or PR333/P trip unit)
K51/SZout (DFout)	= Zone selectivity: output for protection S or “direct” output for protection D (only with Uaux. and PR332/P or PR333/P trip unit)
K51/YC	= Closing control from PR332/P or PR333/P electronic trip unit with communication module PR330/D-M and PR330/R actuation unit
K51/YO	= Opening control from PR332/P or PR333/P electronic trip unit with communication module PR330/D-M and PR330/R actuation unit
M	= Motor for charging the closing springs
Q	= Circuit-breaker
Q/1...6	= Circuit-breaker auxiliary contacts
S33M/1...3	= Limit contacts for spring-charging motor
S43	= Switch for setting remote/local control
S51	= Contact for electrical signalling of circuit-breaker open due to tripping of the overcurrent trip unit. The circuit-breaker may be closed only after pressing the reset pushbutton, or after energizing the coil for electrical reset (if available)
S51/P1	= Programmable contact (as default it signals overload present - start)
S75E/1...2	= Contacts for electrical signalling of circuit-breaker in racked-out position (only with withdrawable circuit-breakers)

SC = Pushbutton or contact for closing the circuit-breaker
S75I/1...7 = Contacts for electrical signalling of circuit-breaker in racked-in position (only with withdrawable circuit-breakers)
S75T/1..2 = Contacts for electrical signalling of circuit-breaker in test isolated position (only with withdrawable circuit-breakers)
SO = Pushbutton or contact for opening the circuit-breaker
SO1 = Pushbutton or contact for opening the circuit-breaker with delayed trip
SO2 = Pushbutton or contact for opening the circuit-breaker with instantaneous trip
SR = Pushbutton or contact for electrical circuit-breaker reset
SRTC = Contact for electrical signalling of circuit-breaker open, with springs charged and ready to close
TI/L1 = Current transformer located on phase L1
TI/L2 = Current transformer located on phase L2
TI/L3 = Current transformer located on phase L3
TU = Isolation voltage transformer
Uaux. = Auxiliary power supply voltage (see note F)
UI/L1 = Current sensor (Rogowski coil) located on phase L1
UI/L2 = Current sensor (Rogowski coil) located on phase L2
UI/L3 = Current sensor (Rogowski coil) located on phase L3
UI/N = Current sensor (Rogowski coil) located on neutral
UI/O = Current sensor (Rogowski coil) located on the conductor connecting to earth the star point of the MV/LV transformer (see note G)
W1 = Serial interface with control system (external bus): EIA RS485 interface (see note E)
W2 = Serial interface with the accessories of PR331/P, PR332/P and PR333/P trip units (internal bus)
X12...X15 = Delivery connectors for auxiliary circuits of withdrawable version circuit-breaker
XB1...XB7 = Connectors for the accessories of the circuit-breaker
XF = Delivery terminal box for the position contacts of the withdrawable circuit-breaker (located on the fixed part of the circuit-breaker)
XO = Connector for YO1 release
XR1-XR2 = Connector for power circuits of PR331/P, PR332/P, and PR333/P trip units.
XR5 – XR13 = Connectors for auxiliary circuits of PR331/P, PR332/P and PR333/P trip units.
XV = Delivery terminal box for the auxiliary circuits of the fixed circuit-breaker
YC = Shunt closing release
YO = Shunt opening release
YO1 = Overcurrent shunt opening release
YO2 = Second shunt opening release (see note Q)
YR = Coil to electrically reset the circuit-breaker
YU = Undervoltage release (see notes B and Q)

Descripton of figures

Fig. 1A = Motor circuit to charge the closing springs.
Fig. 2A = Circuit of shunt closing release.
Fig. 4A = Shunt opening release.
Fig. 6A = Instantaneous undervoltage release (see notes B and Q).
Fig. 7A = Undervoltage release with electronic time-delay device, outside the circuit-breaker (see notes B and Q)
Fig. 8A = Second shunt opening release (see note Q).
Fig. 11A = Contact for electrical signalling of springs charged.
Fig. 12A = Contact for electrical signalling of circuit-breaker open, with springs charged, and ready to close.
Fig. 13A = Contact for electrical signalling of circuit-breaker open due to tripping of the overcurrent release. The circuit-breaker may be closed only after pressing the reset pushbutton.
Fig. 14A = Contact for electrical signalling of circuit-breaker open due to tripping of the overcurrent release and electrical reset coil. The circuit-breaker may be closed only after pressing the reset pushbutton or energizing the coil.
Fig. 22A = Circuit-breaker auxiliary contacts.
Fig. 23A = 15 additional auxiliary contacts.
Fig. 31A = First set of contacts for electrical signalling of circuit-breaker in racked-in, test isolated, racked-out position.
Fig. 41A = Auxiliary circuits of PR331/P trip unit (see note F).
Fig. 42A = Auxiliary circuits of PR332/P and PR333/P trip units (see notes F and N).
Fig. 43A = Circuits of the measuring module PR330/V of the PR332/P and PR333/P trip units internally connected to the circuit-breaker (optional for the PR332/P trip unit; see note U).
Fig. 44A = Circuits of the measuring module PR330/V of the PR332/P and PR333/P trip units externally connected to the circuit-breaker (optional for the PR332/P trip unit; see notes O and U).
Fig. 45A = Circuits of the PR332/P trip unit with communication module PR330/D-M connected to PR330/V actuation unit (see notes E, F and N).
Fig. 46A = Circuits of the PR332/P or PR333/P release PR330/V measuring module connected internally to the three-pole circuit-breaker with external neutral conductor (optional for PR332/P and standard for PR333/P (see note U).
Fig. 61A = SOR TEST UNIT Test/monitoring unit (see note R).
Fig. 62A = Circuits of the PR021/K signalling module (outside the circuit-breaker) .

Incompatibilities

The circuits indicated in the following figures cannot be supplied simultaneously on the same circuit-breaker:
6A – 7A – 8A
13A – 14A
41A – 42A – 45A

Notes

A) The circuit-breaker is only fitted with the accessories specified in the ABB SACE order acknowledgement. Consult this catalogue for information on how to make out an order.
B) The undervoltage trip unit is supplied for operation using a power supply branched on the supply side of the circuit-breaker or from an independent source. The circuit-breaker can only close when the trip unit is energized (there is a mechanical lock on closing).
E) For the EIA RS485 serial interface connection see document ITSCE - RH0298 regarding MODBUS communication.
F) The auxiliary voltage Uaux allows actuation of all operations of the PR331/P, PR332/P and PR333/P trip units. Having requested a Uaux insulated from earth, one must use “galvanically separated converters” in compliance with IEC 60950 (UL 1950) or equivalent standards that ensure a common mode current or leakage current (see IEC 478/1, CEI 22/3) not greater than 3.5 mA, IEC 60364-41 and CEI 64-8.
G) Earth fault protection is available with the PR332/P and PR333/P trip units by means of a current sensor located on the conductor connecting to earth the star center of the MV/LV transformer.
The connections between terminals 1 and 2 (or 3) of current transformer UI/O and poles T7 and T8 of the X (or XV) connector must be made with a two-pole shielded and stranded cable (see user manual), no more than 15 m long. The shield must be earthed on the circuit-breaker side and current sensor side.
N) With PR332/P and PR333/P trip units, the connections to the zone selectivity inputs and outputs must be made with a two-pole shielded and stranded cable (see user manual), no more than 300 m long. The shield must be earthed on the selectivity input side.
O) Systems with rated voltage of less than 100V or greater than 690V require the use of an insulation voltage transformer to connect to the busbars.
P) With PR332/P and PR333/P trip units with communication module PR330/D-M, the power supply for coils YO and YC must not be taken from the main power supply. The coils can be controlled directly from contacts K51/YO and K51/YC with maximum voltages of 60 V DC and 240-250 V AC.
Q) The second opening release may be installed as an alternative to the undervoltage trip unit.
R) The SACE SOR TEST UNIT + opening release (YO) is guaranteed to operate starting at 75% of the Uaux of the opening release itself. While the YO power supply contact is closing (short-circuit on terminals 4 and 5), the SACE SOR TEST UNIT is unable to detect the opening coil status. Consequently:
- For continuously powered opening coil, the TEST FAILED and ALARM signals will be activated
- If the coil opening command is of the pulsing type, the TEST FAILED signal may appear at the same time. In this case, the TEST FAILED signal is actually an alarm signal only if it remains lit for more than 20s.
S) The connection cable shield must only be earthed on the circuit-breaker side.
T) The connections between the TO toroidal transformer and the poles of the X13 (or XV) connector of the circuit-breaker must be made using a four-pole shielded cable with paired braided conductors (BELDEN 9696 paired type), with a length of not more than 15 m. The shield must be earthed on the circuit-breaker side.
U) The measuring module PR330/V is always supplied with relay PR333/P.

Electric diagrams

Reading information - ATS010

State of operation shown

The diagram shows the following conditions:
– Circuit-breakers open and racked in #
– Generator not under alarm
– Closing springs discharged
– Overcurrent releases not tripped *
– ATS010 not supplied
– Generator on automatic operation and not started
– Switching to generator unit enabled
– Circuits not supplied
– Logic enabled by means of appropriate input (terminal 47).

This diagram shows withdrawable version circuit-breakers but is also valid for fixed version circuit-breakers: the auxiliary circuits of the circuit-breakers do not head to connectors X12-X15 but to terminal box XV; also connect terminal 35 to 38 of the ATS010 device.

* This diagram shows circuit-breakers with overcurrent release but is also valid for circuit-breakers without overcurrent release: connect terminal 18 with 20 and terminal 35 with 37 of the ATS010 device.

@ This diagram shows four-pole circuit-breakers but is also valid for two-pole circuit-breakers: only use terminals 26 and 24 (phase and neutral) for the voltmetric connections of the normal power supply of the ATS010 device; also use two-pole auxiliary protection circuit-breaker Q61/2 instead of the four-pole one.

Caption

A	=	ATS010 device for automatic switching of two circuit-breakers
K1	=	Auxiliary contact type VB6-30-01 for presence of emergency power supply voltage
K2	=	Auxiliary contact type VB6-30-01 for presence of normal power supply voltage
K51/Q1	=	Overcurrent relay of the emergency power supply line *
K51/Q2	=	Overcurrent relay of the normal power supply line *
KC1-KC2	=	BC6-30 type auxiliary contacts for closing the circuit-breakers
KO1-KO2	=	BC6-30 type auxiliary contacts for opening the circuit-breakers
M	=	Motor for closing spring charging
Q/1	=	Auxiliary contact of the circuit-breaker
Q1	=	Emergency line power supply circuit-breaker
Q2	=	Normal line power supply circuit-breaker
Q61/1-2	=	Thermomagnetic circuit-breakers for isolation and protection of the auxiliary circuits @
S11...S16	=	Signalling contacts for the inputs of the ATS010 device
S33M/1	=	Limit switch contact of the closing springs
S51	=	Contact for electrical signalling of circuit-breaker open due to overcurrent release trip *
S75I/1	=	Contact for electrical signalling of withdrawable version circuit-breaker racked in #
TI/…	=	Current transformers for overcurrent release power supply
X12-X15	=	Connectors for the auxiliary circuits of the withdrawable version circuit-breaker
XF	=	Delivery terminal box for the position of the withdrawable version circuit-breaker
XV	=	Delivery terminal box for the auxiliary circuits of the fixed version circuit-breaker
YC	=	Shunt closing release
YO	=	Shunt opening release

Note:

A) For the auxiliary circuits of the circuit-breakers see the relative diagrams. The applications indicated in the following figures are compulsory: 1A - 2A - 4A - 13A (only if the overcurrent release is supplied) - 22A - 31A (only for withdrawable version circuit-breakers).

Circuit diagrams

Circuit diagram symbols (IEC 60617 and CEI 3-14 ... 3-26 Standards)

	Shield (may be drawn in any shape)		Terminal		Position switch (limit switch) change-over break before make contact
	Delay		Plug and socket (male and female)		Circuit-breaker-disconnector with automatic release
	Mechanical connection (link)	M	Motor (general symbol)		Switch-disconnector (on-load isolating switch)
	Manually operated control (general case)		Current transformer		Operating device (general symbol)
	Operated by turning		Voltage transformer	/ >>>	Instantaneous overcurrent or rate-of-rise relay
	Operated by pushing		Winding of three-phase transformer, connection star	/ >>	Overcurrent relay with adjustable short time-lag characteristic
	Equipotentiality		Make contact	/ >>	Overcurrent relay with inverse short time-lag characteristic
	Converter with galvanic separator		Break contact	/ >	Overcurrent relay with inverse long time-lag characteristic
	Conductors in a screened cable (i.e., 3 conductors shown)		Change-over break before make contact	/ >>	Earth fault overcurrent relay with inverse short time-lag characteristic
	Twisted conductors (i.e., 3 conductors shown)		Position switch (limit switch), make contact		Fuse (general symbol)
	Connection of conductors		Position switch (limit switch), break contact	/	Current sensing element
	Thermal effect		Electromagnetic effect		Mechanical interlock between two devices
	Contactor (closing contact)				

7

Operating status

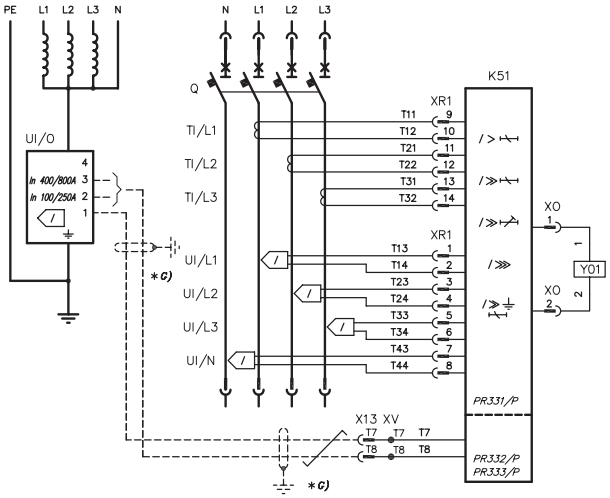

Four-pole circuit-breaker with PR331/P, PR332/P or PR333P electronic trip unit

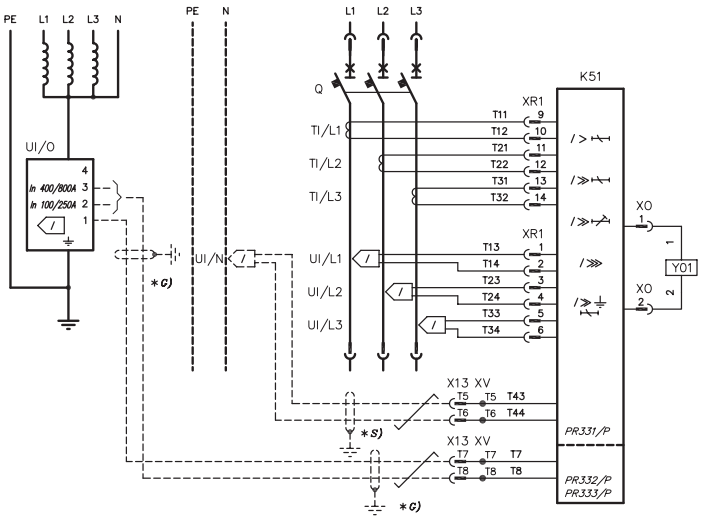

Three-pole circuit-breaker with PR331/P, PR332/P or PR333P electronic trip unit

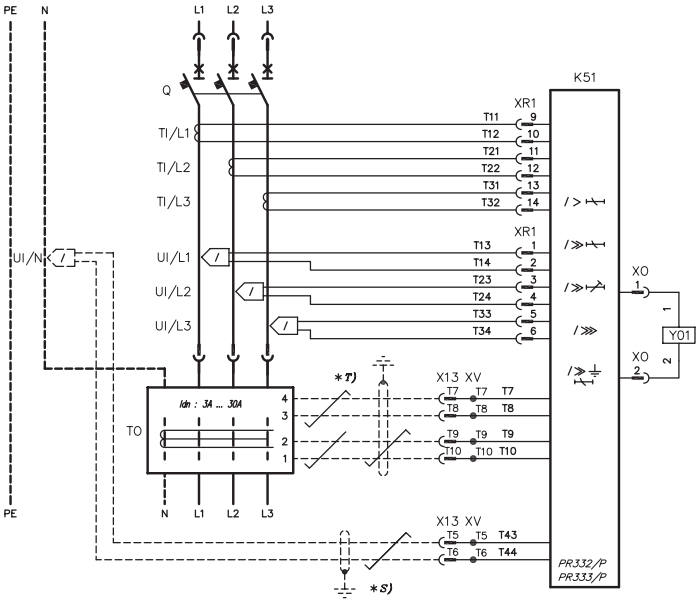

Three-pole circuit-breaker with PR331/P, PR332/P or PR333/P electronic trip unit

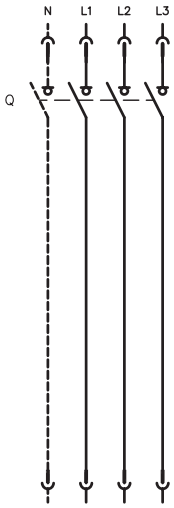

Three- or four-pole switch-disconnector

Motor operating mechanism, opening, closing and undervoltage releases

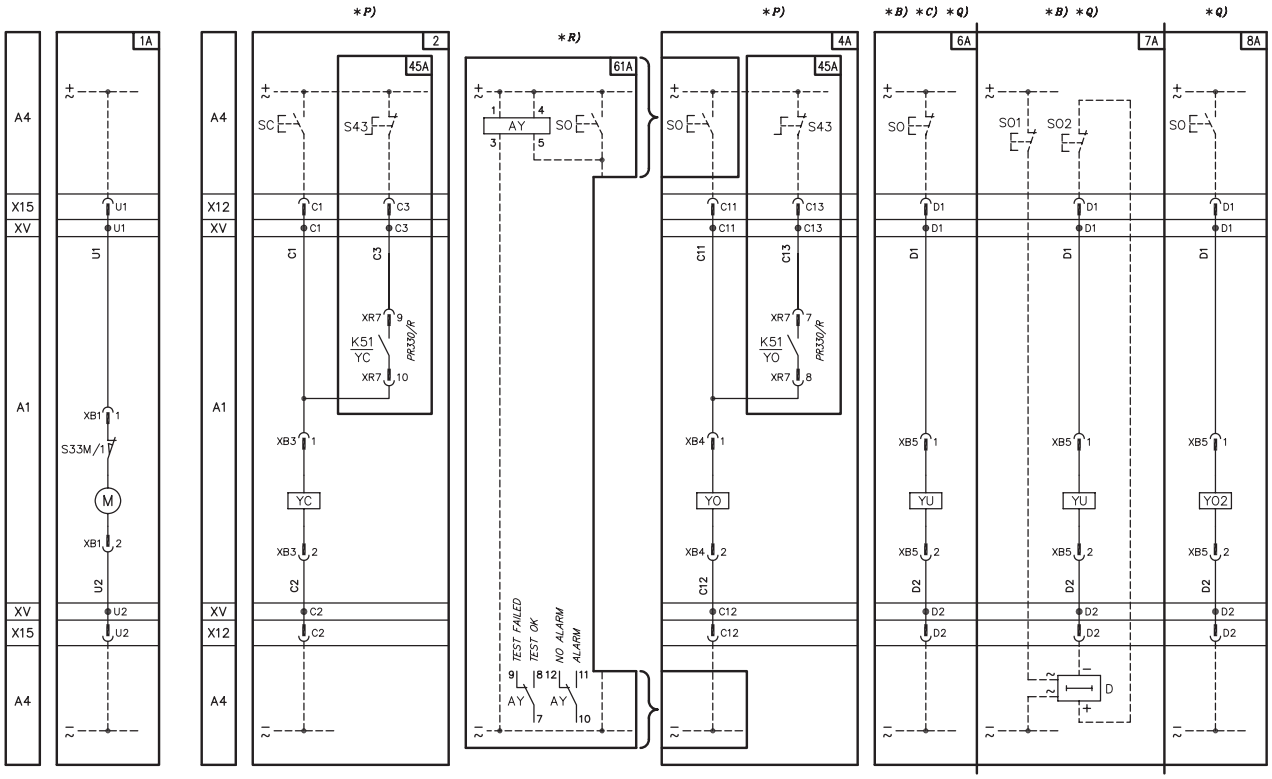

Signalling contacts

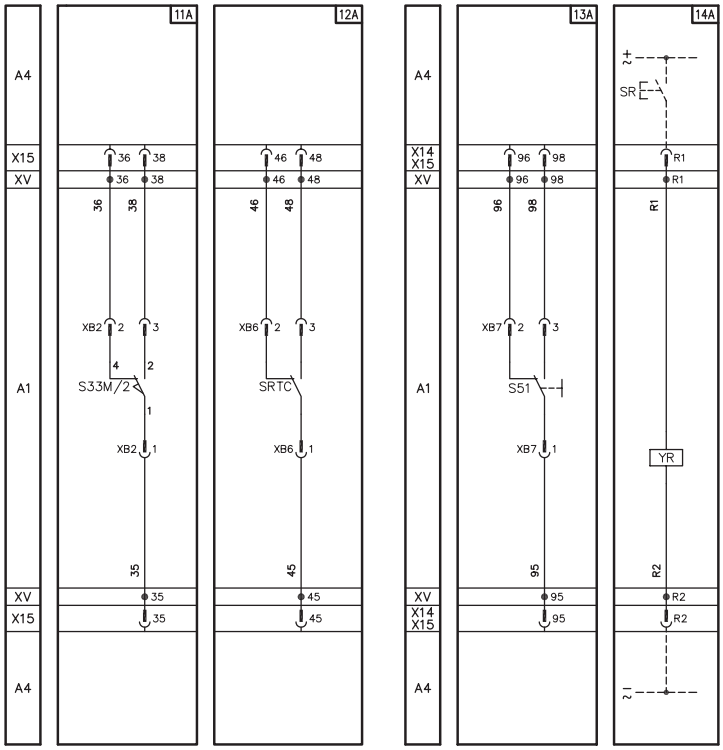

Signalling contacts

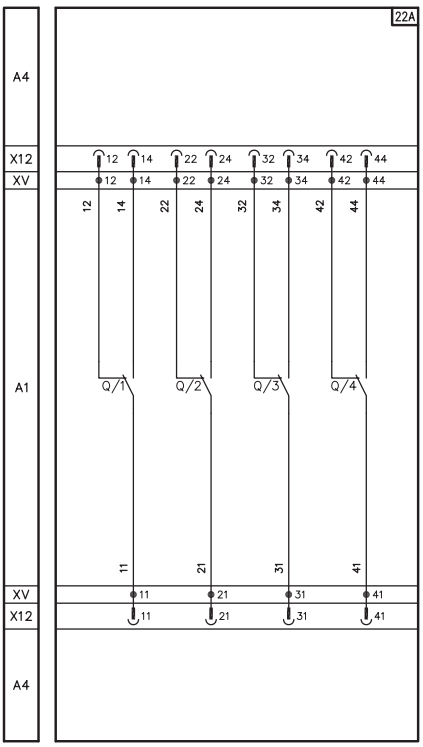

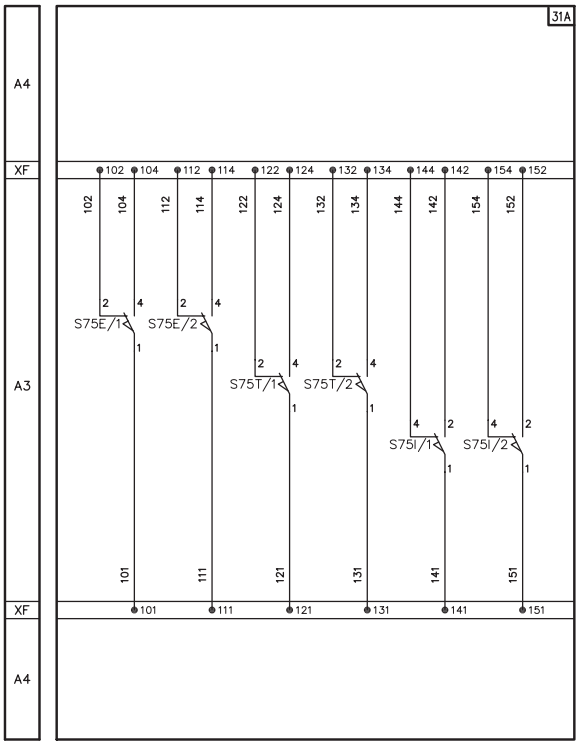

15 additional auxiliary contacts

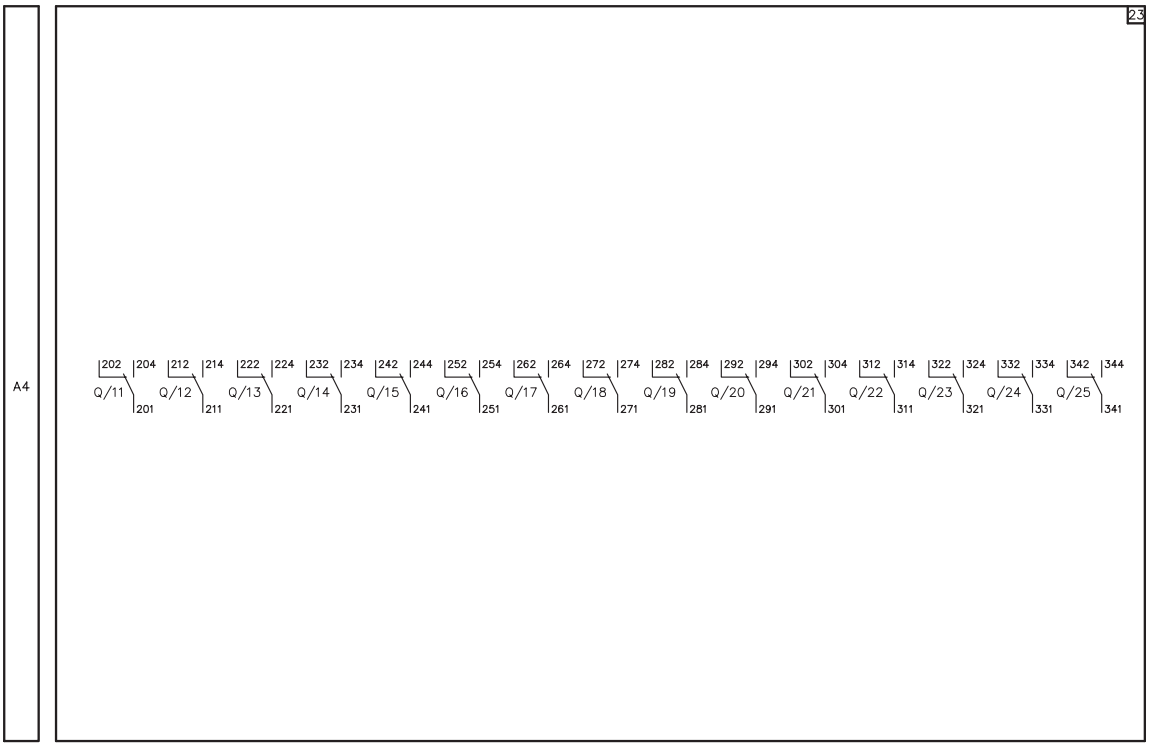

Auxiliary circuits of the PR331, PR332 and PR333 trip units

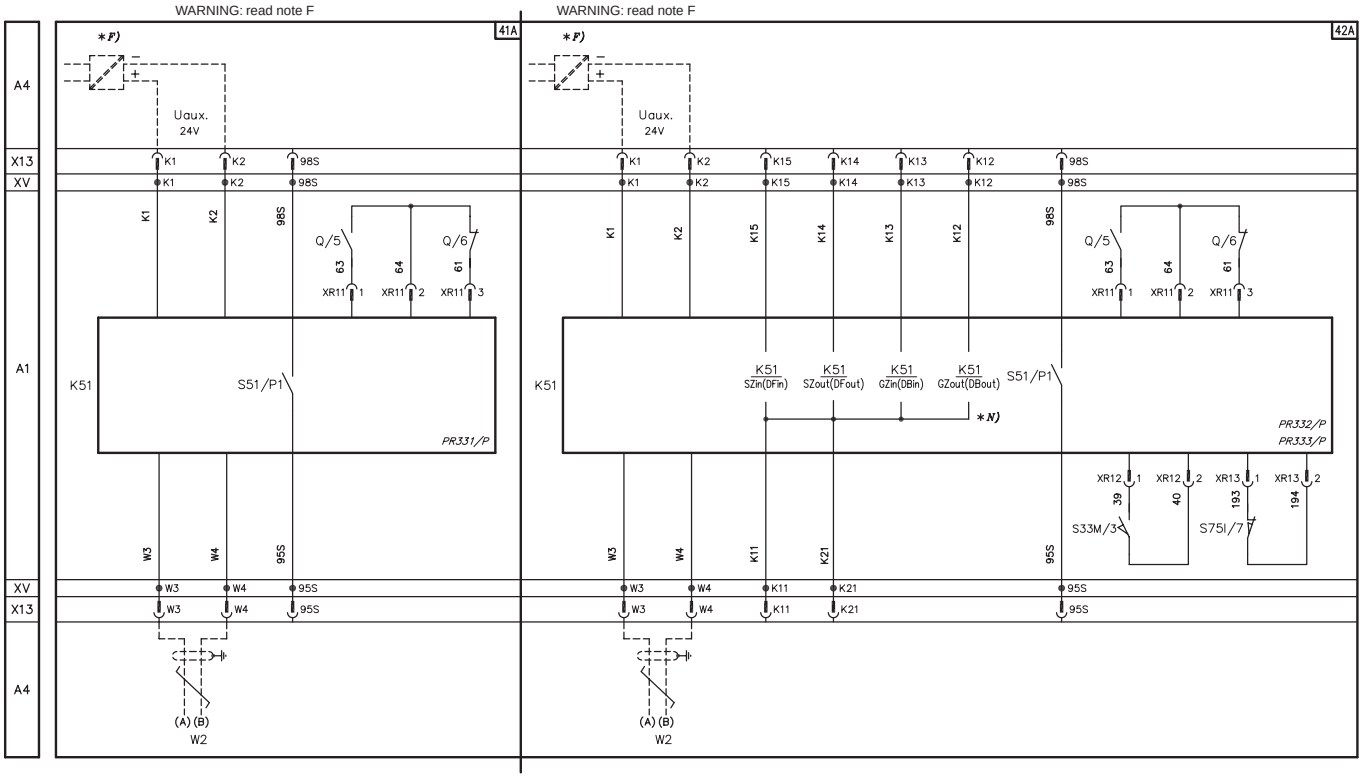

Measuring module PR330/V

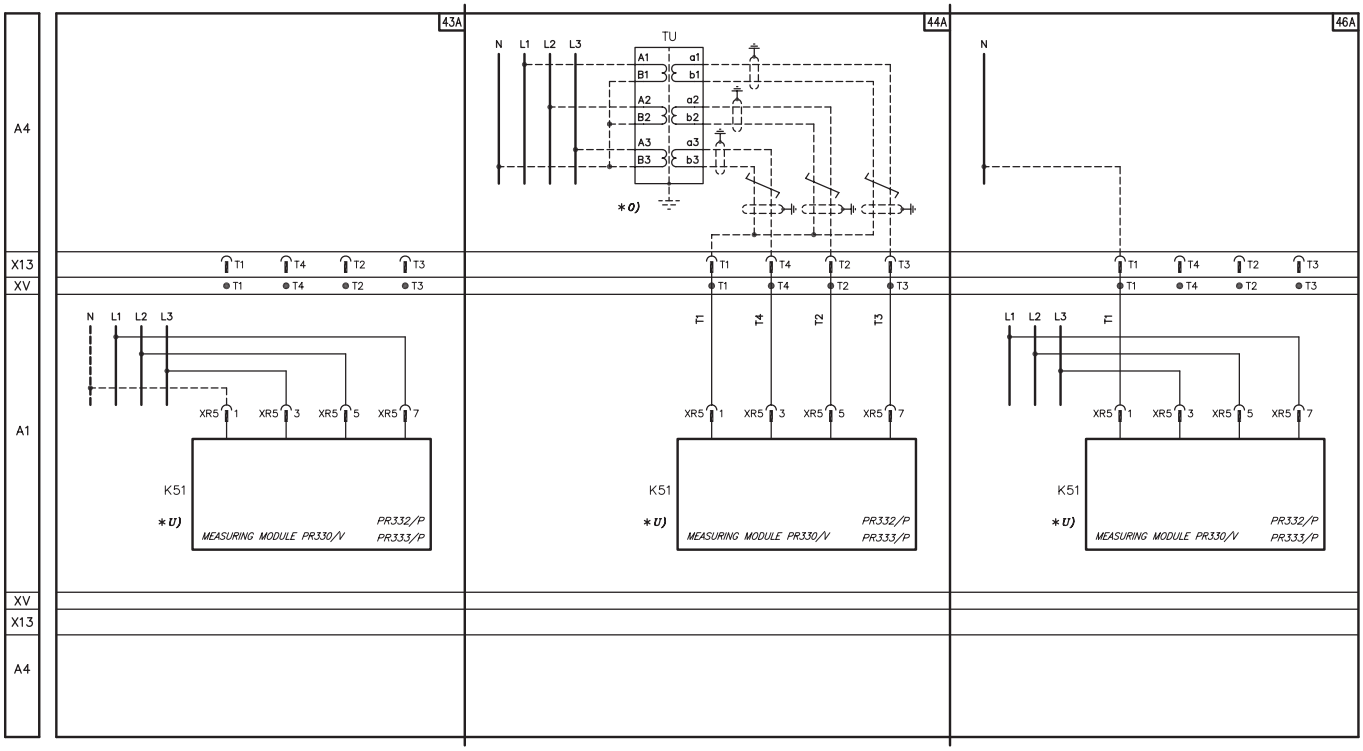

PR332/P and PR333/P electronic trip units connected to PR330/R actuation unit and PR330/D-M dialogue unit

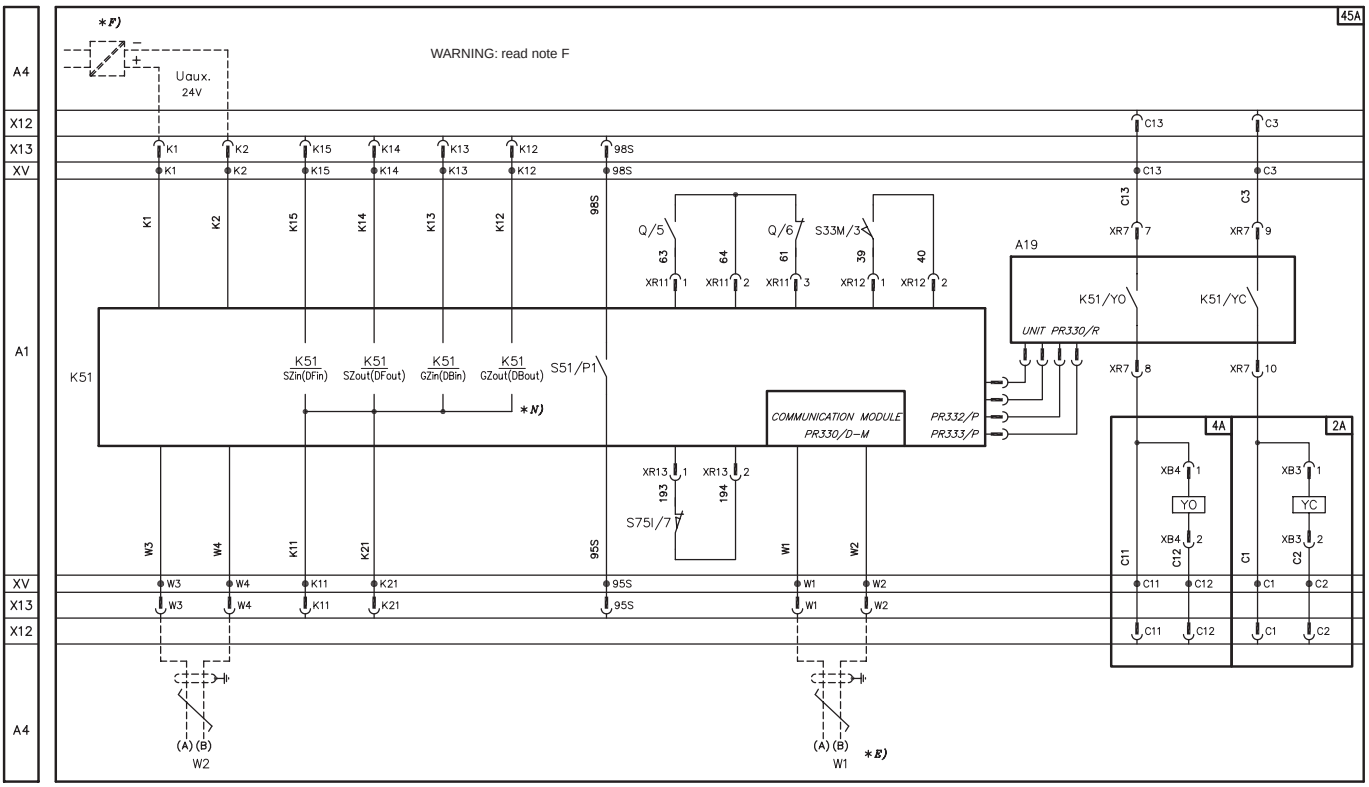

PR021/K signalling unit

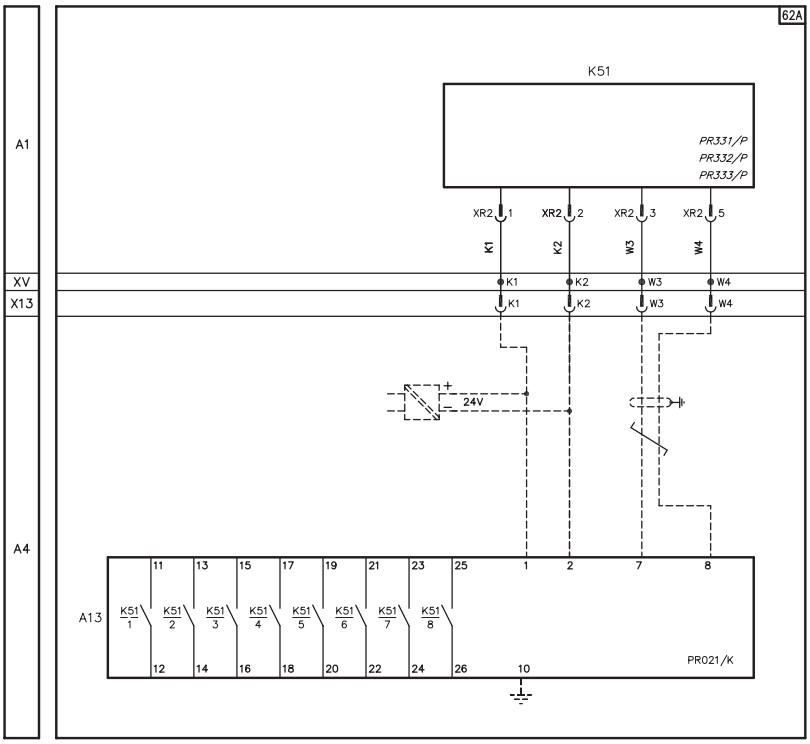

ATS010 for the automatic transfer-switch of two circuit-breakers

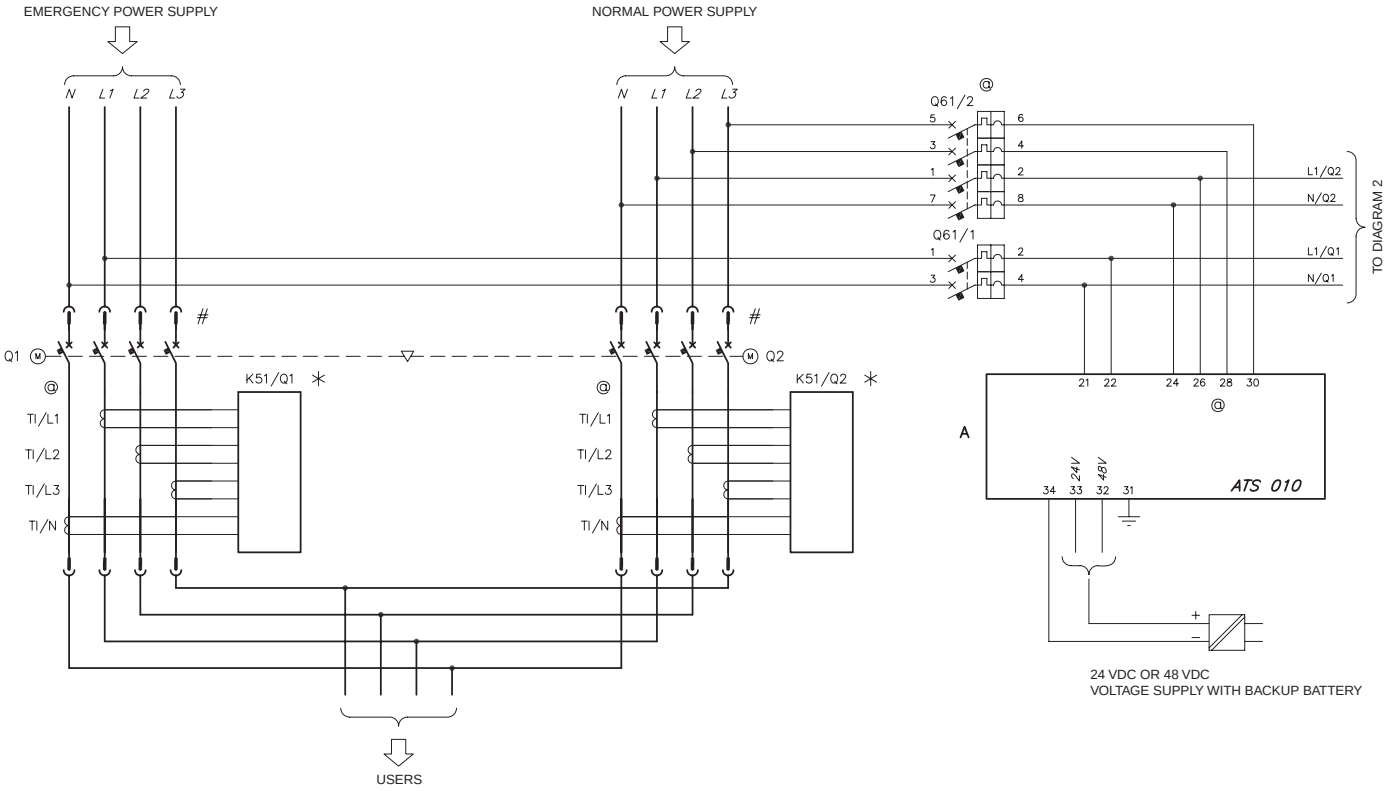

Without safety auxiliary voltage supply

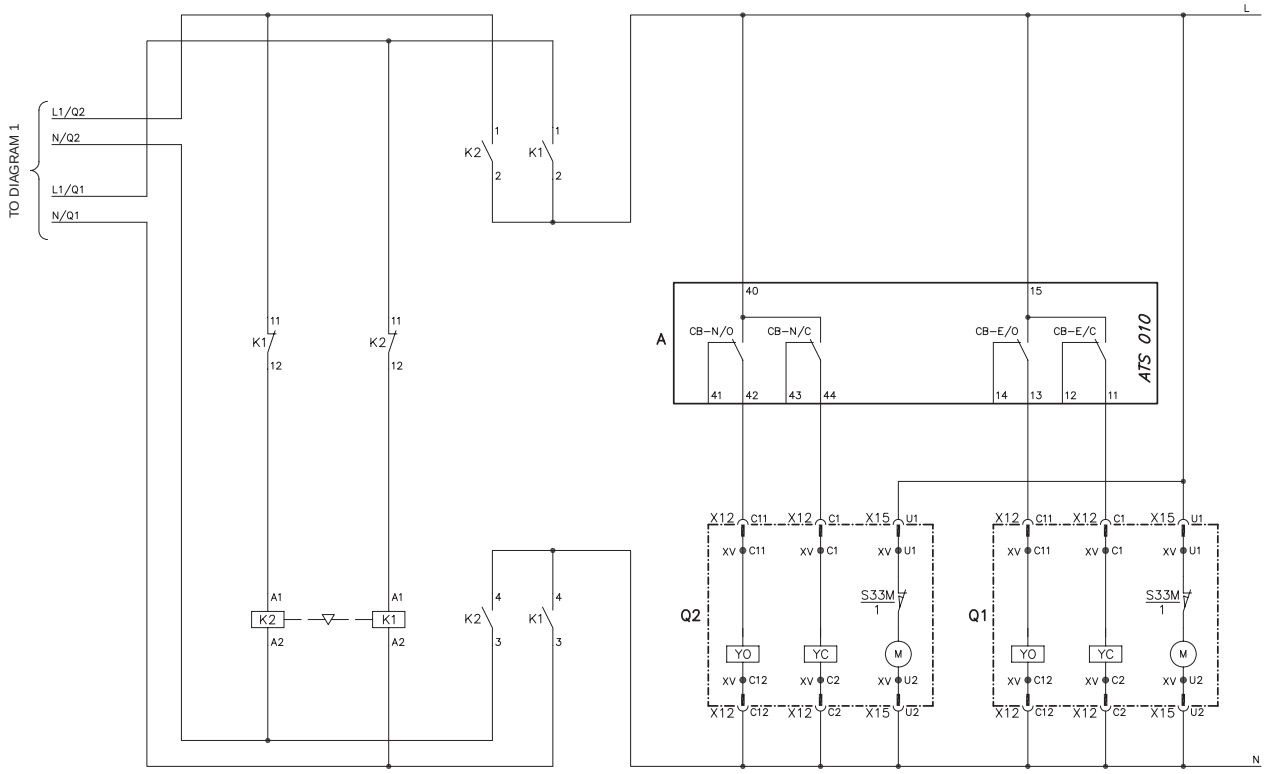

With auxiliary safety power supply in AC

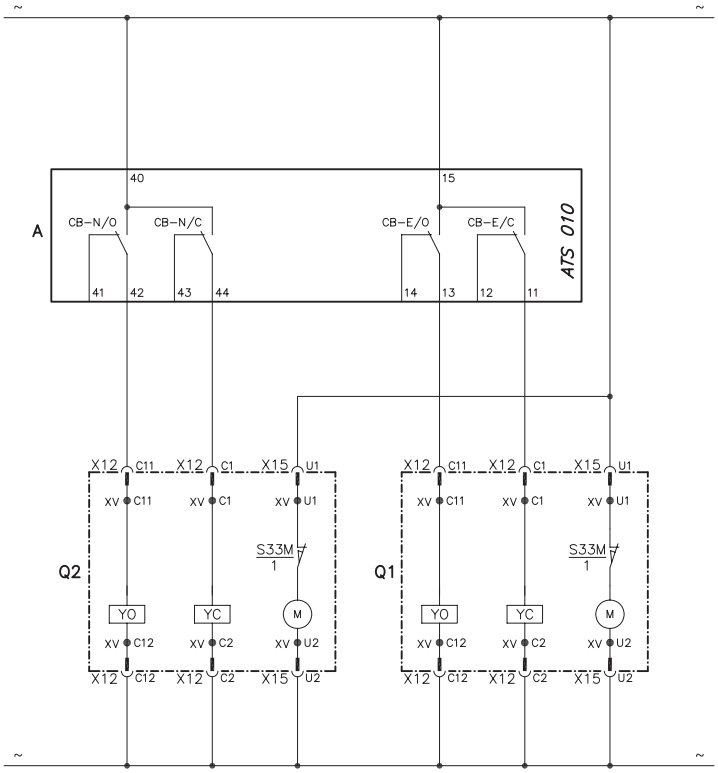

With auxiliary safety power supply in DC

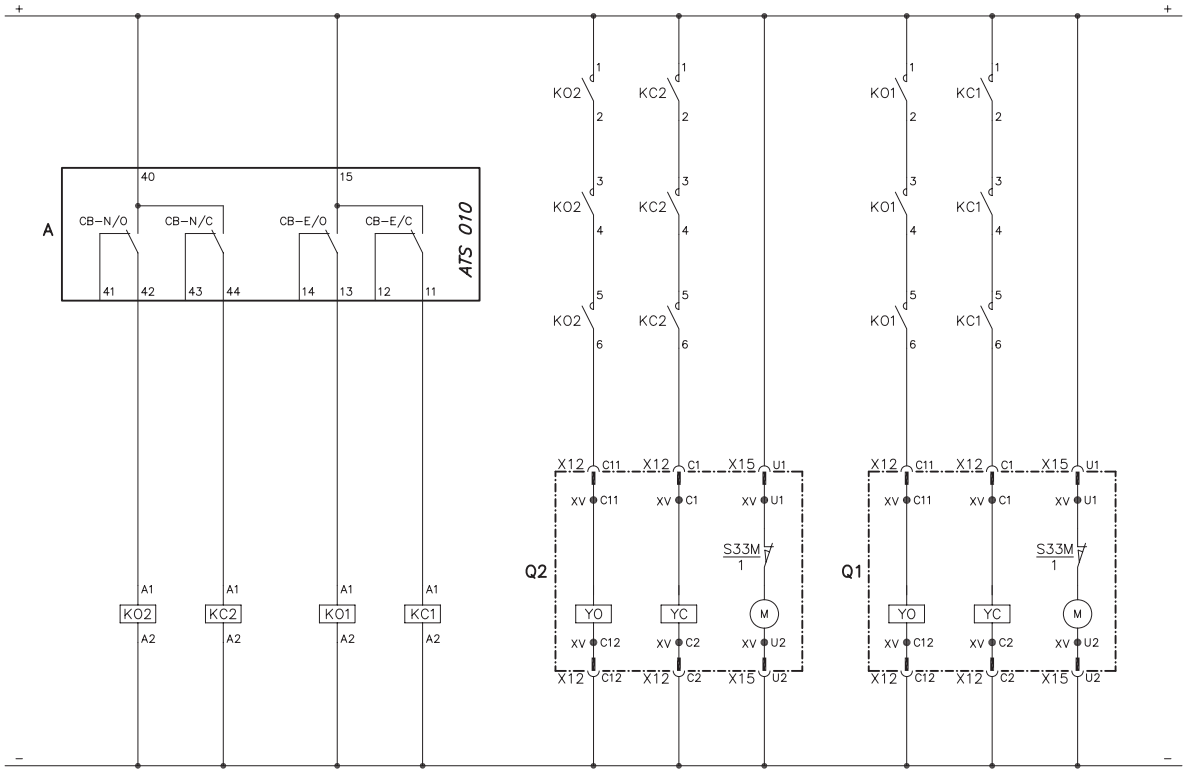

Automatic transfer-switch ATS010

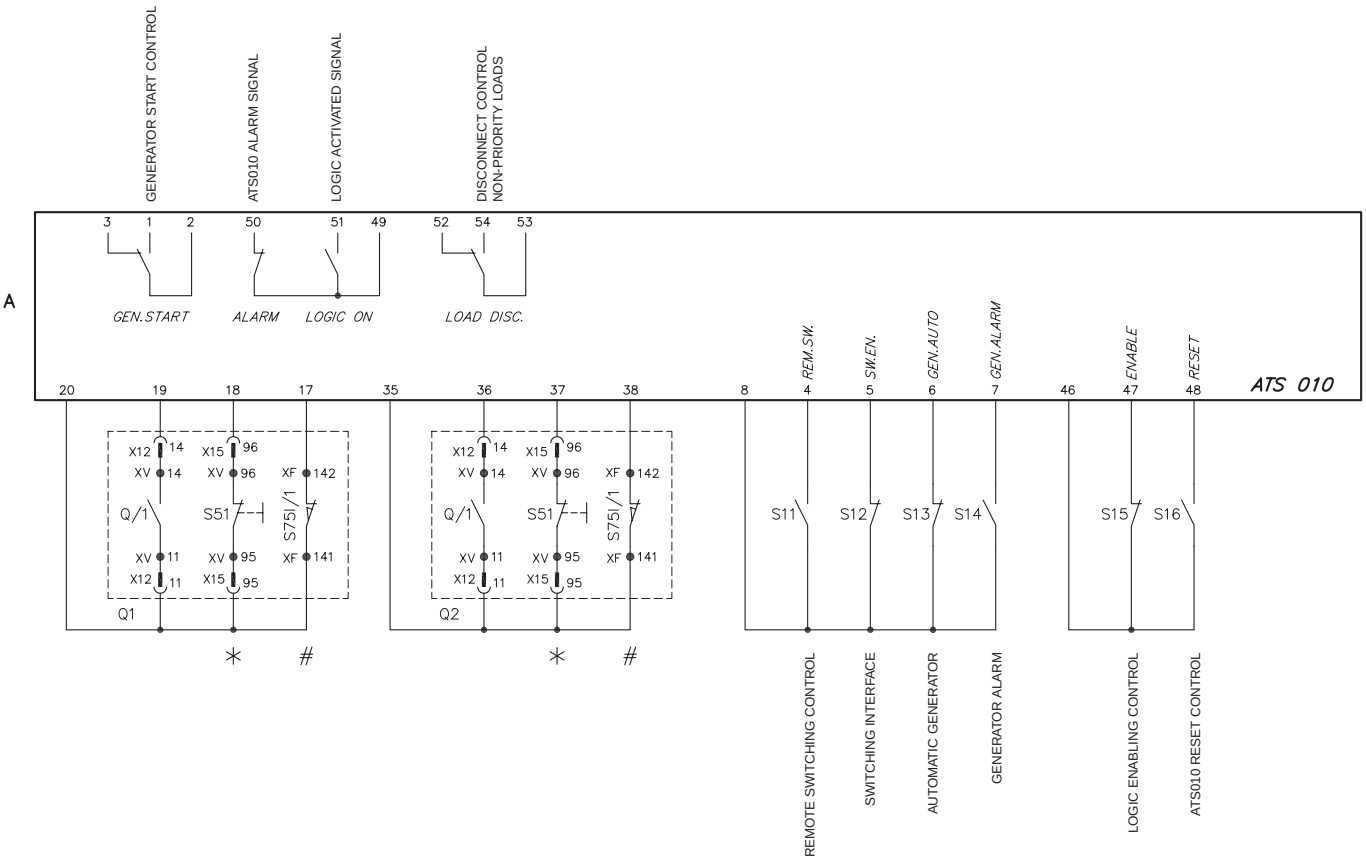


by

Ordering codes

Contents

Ordering codes

General information

Abbreviations used to describe the apparatus

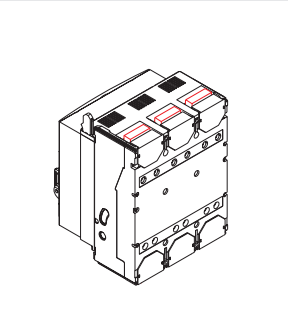

F = Front terminals

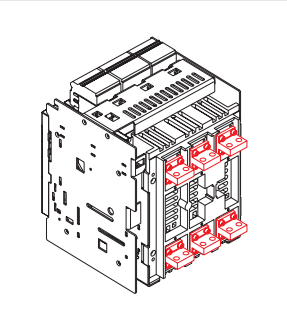

HR = Horizontal rear terminals

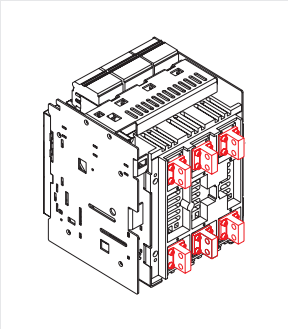

VR = Vertical rear terminals

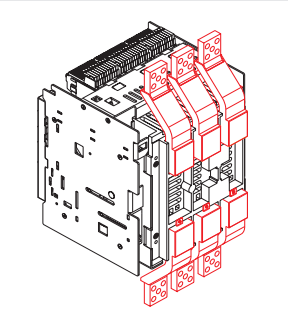

EF = Front extended terminals

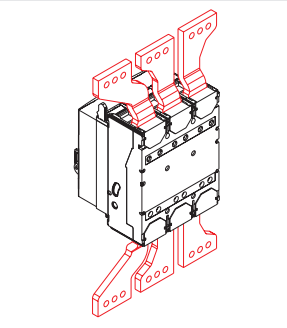

ES = Front spread terminals

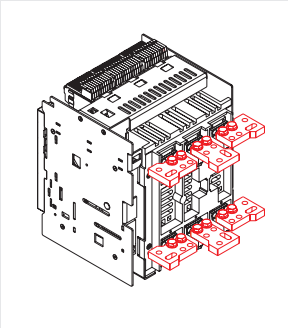

RS = Rear spread terminals

HR/VR	Adjustable terminals (horizontal/vertical)
F	Fixed
W	Withdrawable
MP	Moving part for withdrawable circuit-breakers
FP	Fixed part for withdrawable circuit-breakers
PR331/P	PR331/P Electronic trip unit (LI, LSI, LSIG functions)
PR332/P	PR332/P Electronic trip unit (LSI, LSIG, LSIRc functions)
PR333/P	PR333/P Electronic trip unit (LSI, LSIG functions)
	Functions:
L	Protection against overload with long inverse time-delay trip
S	Selective protection against short-circuit with short inverse or definite time-delay trip
I	Protection against instantaneous short-circuit with adjustable trip current threshold
G	Protection against earth faults
Rc	Protection against residual current earth faults
Iu	Rated uninterrupted current of the circuit-breaker
In	Rated current of the electronic trip unit current transformers
Icu	Rated ultimate short-circuit breaking capacity
Icw	Rated short-time withstand current
AC	AC applications
DC	DC applications
/MS	Switch-disconnector

Ordering codes

Examples of ordering

The Emax X1 circuit-breakers in the standard version are identified by means of sales codes to which the terminal kit codes can be added in modification for fixed the circuit-breaker (other than front) and the extra codes for the rating plug. The, a series accessories can be added to the basic circuit-breaker which can be ordered with their corresponding codes.

Some particularly interesting examples are given below for correct order loading.

1) Terminal kit codes for fixed circuit-breakers (other than front)

The Emax X1 circuit-breakers are supplied, in the fixed version, with front terminals mounted. To fit accessories for the circuit-breaker with terminals other than those normally supplied, it is possible to ask for whole kits (with 6 or 8 pieces) or half kits (with 3 or 4 pieces), according to whether you want to have an Emax X1 circuit-breaker with the same top and bottom terminals, or a mixture of these. In the case of the mixed solution, the first code specified indicates the 3 or 4 terminals to be mounted at the top, and the second indicates the 3 or 4 terminals to be mounted at the bottom. On the other hand, if only 3 or 4 pieces are ordered, it is important to expressly specify whether the half kit is to be mounted at the top (*) rather than at the bottom (except for the extended spread front terminal kit – ES, for a 3-pole circuit-breaker, where there are 2 different codes for the top and bottom kits)

Example n.1

3-pole fixed Emax X1 with vertical rear terminals (VR))

	1SDA...R1
X1B 1000 PR332/P LSIG In=1000A 3p F F	062358
KIT VR T7-T7M-X1 6pcs	063126

Example n.2

4-pole fixed Emax X1 with top rear oriented terminals (R) and bottom front extended (EF) terminals

	1SDA...R1
X1B 1000 PR332/P LSIG In=1000A 4p F F	062367
KIT R T7-T7M-X1 4pcs	063117
KIT EF T7-T7M-X1 4pcs	063104

Example n.3

4-pole fixed Emax X1 with top rear vertical (VR) and bottom front (F) terminals

	1SDA...R1
X1B 1000 PR332/P LSIG In=1000A 4p F F	062367
KIT VR T7-T7M-X1 4pcs (*)	063125

2) Rating plug for Emax X1

Thanks to the extra codes for the rating plug Emax X1 (see page 8/19), it is possible to request an Emax X1 circuit-breaker with a lower rated current than the standard versions.

X1B 400 with 332/P LSIG

	1SDA...R1
X1B 1000 PR332/P LSIG In=1000A 3p F F	062358
Extra code for In=400 A	063153

3) Sliding contacts for Emax X1 in withdrawable version

The electrical accessories of Emax X1 in the withdrawable version must be fitted with special sliding contacts for the moving part and for the fixed part, as shown in the table on page 4/12.

Example n.1

X1B 1000 PR331/P in withdrawable version, shunt opening release

		1SDA...R1
POS1	X1B 1000 PR331/P LSI In=1000A 3p W MP	062372
	Shunt opening release SOR 240…250 V AC/DC	062070
POS2	Fixed part for withdrawable 3p X1 EF-EF	062045
	Right-hand block – FP X1	062169
	Central block – FP X1	062168

Example n.2

X1B 1000 PR331/P in withdrawable version, trip reset

		1SDA...R1
POS1	X1B 1000 PR331/P LSI In=1000A 3p W MP	062372
	AUX-SA 250 V AC	063553
	TRIP RESET X1 24...30 V AC/DC	063554
POS2	Fixed part for X1 withdrawable 3p EF-EF	062045
	Right-hand block – FP X1	062169
	Central block – FP X1	062168
	Left-hand block – FP X1	062167

4) Motorisation for Emax X1

For motorisation of Emax X1, the circuit-breaker must be fitted with a spring charging geared motor, shunt opening release and shunt closing release.

X1B 1000 motorised PR332/P

	1SDA...R1
X1B 1000 PR332/P LSIG In=1000A 3p F F	062358
Spring charging geared motor 220…250 V AC/DC	062116
Shunt opening release SOR 240…250 V AC/DC	062070
Shunt opening and closing release SCR 240…250 V AC/DC	062081

Ordering codes

SACE Emax X1 automatic circuit-breakers

	PR331/P		PR332/P		PR333/P	
	1SDA.....R1 3 Poles	4 Poles	1SDA.....R1 3 Poles	4 Poles	1SDA.....R1 3 Poles	4 Poles

X1B 06
Fixed (F)

Iu (40 °C) = 630 A Icu (415 V) = 42 kA Icw (1 s) = 42 kA

F = Front terminals						
LI	061996	062005	061999	062008		
LSI	061997	062006	062000	062009	062003	062012
LSIG	061998	062007	062001	062010	062004	062013
LSIRc*			062002	062011		

* supplied with PR330/V and to be order with toroid for residual current protection 1SDA063869R1

X1N 06
Fixed (F)

Iu (40 °C) = 630 A Icu (415 V) = 42 kA Icw (1 s) = 42 kA

F = Front terminals						
LI	062173	062182	062176	062185		
LSI	062174	062183	062177	062186	062180	062189
LSIG	062175	062184	062178	062187	062181	062190
LSIRc*			062179	062188		

* supplied with PR330/V and to be order with toroid for residual current protection 1SDA063869R1

X1L 06
Fixed (F)

Iu (40 °C) = 630 A Icu (415 V) = 150 kA Icw (1 s) = 15 kA

F = Front terminals						
LI	062209	062218	062212	062221		
LSI	062210	062219	062213	062222	062216	062225
LSIG	062211	062220	062214	062223	062217	062226
LSIRc*			062215	062224		

* supplied with PR330/V and to be order with toroid for residual current protection 1SDA063869R1

X1B 08
Fixed (F)

Iu (40 °C) = 800 A Icu (415 V) = 42 kA Icw (1 s) = 42 kA

F = Front terminals						
LI	062245	062254	062248	062257		
LSI	062246	062255	062249	062258	062252	062261
LSIG	062247	062256	062250	062259	062253	062262
LSIRc*			062251	062260		

* supplied with PR330/V and to be order with toroid for residual current protection 1SDA063869R1

X1N 08
Fixed (F)

Iu (40 °C) = 800 A Icu (415 V) = 65 kA Icw (1 s) = 42 kA

F = Front terminals						
LI	062281	062290	062284	062293		
LSI	062282	062291	062285	062294	062288	062297
LSIG	062283	062292	062286	062295	062289	062298
LSIRc*			062287	062296		

* supplied with PR330/V and to be order with toroid for residual current protection 1SDA063869R1

X1L 08
Fixed (F)

Iu (40 °C) = 800 A Icu (415 V) = 150 kA Icw (1 s) = 15 kA

F = Front terminals						
LI	062317	062326	062320	062329		
LSI	062318	062327	062321	062330	062324	062333
LSIG	062319	062328	062322	062331	062325	062334
LSIRc*			062323	062332		

* supplied with PR330/V and to be order with toroid for residual current protection 1SDA063869R1

Fixed parts ..... **page 8/**14 **Terminals** .....**page 8/**19

Ordering codes

SACE Emax X1 automatic circuit-breakers

X1B 10
Fixed (F)

Iu (40 °C) = **1000 A** Icu (415 V) = **42 kA** Icw (1 s) = **42 kA**

F = Front terminals	PR331/P 1SDA.....R1 3 Poles	PR331/P 1SDA.....R1 4 Poles	PR332/P 1SDA.....R1 3 Poles	PR332/P 1SDA.....R1 4 Poles	PR333/P 1SDA.....R1 3 Poles	PR333/P 1SDA.....R1 4 Poles
LI	062353	062362	062356	062365		
LSI	062354	062363	062357	062366	062360	062369
LSIG	062355	062364	062358	062367	062361	062370
LSIRc*			062359	062368		

* supplied with PR330/V and to be order with toroid for residual current protection 1SDA063869R1

X1N 10
Fixed (F)

Iu (40 °C) = **1000 A** Icu (415 V) = **65 kA** Icw (1 s) = **42 kA**

F = Front terminals						
LI	062389	062398	062392	062401		
LSI	062390	062399	062393	062402	062396	062405
LSIG	062391	062400	062394	062403	062397	062406
LSIRc*			062395	062404		

* supplied with PR330/V and to be order with toroid for residual current protection 1SDA063869R1

X1L 10
Fixed (F)

Iu (40 °C) = **1000 A** Icu (415 V) = **150 kA** Icw (1 s) = **15 kA**

F = Front terminals						
LI	062425	062434	062428	062437		
LSI	062426	062435	062429	062438	062432	062441
LSIG	062427	062436	062430	062439	062433	062442
LSIRc*			062431	062440		

* supplied with PR330/V and to be order with toroid for residual current protection 1SDA063869R1

X1B 12
Fixed (F)

Iu (40 °C) = **1250 A** Icu (415 V) = **42 kA** Icw (1 s) = **42 kA**

F = Front terminals						
LI	062461	062470	062464	062473		
LSI	062462	062471	062465	062474	062468	062477
LSIG	062463	062472	062466	062475	062469	062478
LSIRc*			062467	062476		

* supplied with PR330/V and to be order with toroid for residual current protection 1SDA063869R1

X1N 12
Fixed (F)

Iu (40 °C) = **1250 A** Icu (415 V) = **65 kA** Icw (1 s) = **42 kA**

F = Front terminals						
LI	062497	062506	062500	062509		
LSI	062498	062507	062501	062510	062504	062513
LSIG	062499	062508	062502	062511	062505	062514
LSIRc*			062503	062512		

* supplied with PR330/V and to be order with toroid for residual current protection 1SDA063869R1

X1L 12
Fixed (F)

Iu (40 °C) = **1250 A** Icu (415 V) = **150 kA** Icw (1 s) = **15 kA**

F = Front terminals						
LI	062533	062542	062536	062545		
LSI	062534	062543	062537	062546	062540	062549
LSIG	062535	062544	062538	062547	062541	062550
LSIRc*			062539	062548		

* supplied with PR330/V and to be order with toroid for residual current protection 1SDA063869R1

Fixed parts ..... **page 8/**14 **Terminals** .....**page 8/**19

PR331/P		PR332/P		PR333/P	
1SDA.....R1		1SDA.....R1		1SDA.....R1	
3 Poles	4 Poles	3 Poles	4 Poles	3 Poles	4 Poles

X1B 16

Fixed (F)

Iu (40 °C) = 1600 A Icu (415 V) = 42 kA Icw (1 s) = 42 kA

F = Front terminals						
LI	062569	062578	062572	062581		
LSI	062570	062579	062573	062582	062576	062585
LSIG	062571	062580	062574	062583	062577	062586
LSIRc*			062575	062584		

* supplied with PR330/V and to be order with toroid for residual current protection 1SDA063869R1

X1N 16

Fixed (F)

Iu (40 °C) = 1600 A Icu (415 V) = 65 kA Icw (1 s) = 42 kA

F = Front terminals						
LI	062605	062614	062608	062617		
LSI	062606	062615	062609	062618	062612	062621
LSIG	062607	062616	062610	062619	062613	062622
LSIRc*			062611	062620		

* supplied with PR330/V and to be order with toroid for residual current protection 1SDA063869R1

Fixed parts ..... **page 8/**14 **Terminals** .....**page 8/**19

Ordering codes

SACE Emax X1 automatic circuit-breakers

X1B 06

Withdrawable (W) - MP

Iu (40 °C) = **630 A** Icu (415 V) = **42 kA** Icw (1 s) = **42 kA**

MP = Moving part	PR331/P 1SDA.....R1 3 Poles	PR331/P 1SDA.....R1 4 Poles	PR332/P 1SDA.....R1 3 Poles	PR332/P 1SDA.....R1 4 Poles	PR333/P 1SDA.....R1 3 Poles	PR333/P 1SDA.....R1 4 Poles
LI	062014	062023	062017	062026		
LSI	062015	062024	062018	062027	062021	062030
LSIG	062016	062025	062019	062028	062022	062031
LSIRc*			062020	062029		

* supplied with PR330/V and to be order with toroid for residual current protection 1SDA063869R1

X1N 06

Withdrawable (W) - MP

Iu (40 °C) = **630 A** Icu (415 V) = **65 kA** Icw (1 s) = **42 kA**

MP = Moving part						
LI	062191	062200	062194	062203		
LSI	062192	062201	062195	062204	062198	062207
LSIG	062193	062202	062196	062205	062199	062208
LSIRc*			062197	062206		

* supplied with PR330/V and to be order with toroid for residual current protection 1SDA063869R1

X1L 06

Withdrawable (W) - MP

Iu (40 °C) = **630 A** Icu (415 V) = **150 kA** Icw (1 s) = **15 kA**

MP = Moving part						
LI	062227	062236	062230	062239		
LSI	062228	062237	062231	062240	062234	062243
LSIG	062229	062238	062232	062241	062235	062244
LSIRc*			062233	062242		

* supplied with PR330/V and to be order with toroid for residual current protection 1SDA063869R1

X1B 08

Withdrawable (W) - MP

Iu (40 °C) = **800 A** Icu (415 V) = **42 kA** Icw (1 s) = **42 kA**

MP = Moving part						
LI	062263	062272	062266	062275		
LSI	062264	062273	062267	062276	062270	062279
LSIG	062265	062274	062268	062277	062271	062280
LSIRc*			062269	062278		

* supplied with PR330/V and to be order with toroid for residual current protection 1SDA063869R1

X1N 08

Withdrawable (W) - MP

Iu (40 °C) = **800 A** Icu (415 V) = **65 kA** Icw (1 s) = **42 kA**

MP = Moving part						
LI	062299	062308	062302	062311		
LSI	062300	062309	062303	062312	062306	062315
LSIG	062301	062310	062304	062313	062307	062316
LSIRc*			062305	062314		

* supplied with PR330/V and to be order with toroid for residual current protection 1SDA063869R1

X1L 08

Withdrawable (W) - MP

Iu (40 °C) = **800 A** Icu (415 V) = **150 kA** Icw (1 s) = **15 kA**

MP = Moving part						
LI	062335	062344	062338	062347		
LSI	062336	062345	062339	062348	062342	062351
LSIG	062337	062346	062340	062349	062343	062352
LSIRc*			062341	062350		

* supplied with PR330/V and to be order with toroid for residual current protection 1SDA063869R1

Fixed parts ..... **page 8/**14 **Terminals** .....**page 8/**19



	PR331/P		PR332/P		PR333/P	
	1SDA.....R1 3 Poles	4 Poles	1SDA.....R1 3 Poles	4 Poles	1SDA.....R1 3 Poles	4 Poles

X1B 10

Withdrawable (W) - MP

Iu (40 °C) = 1000 A Icu (415 V) = 42 kA Icw (1 s) = 42 kA

MP = Moving part						
LI	062371	062380	062374	062383		
LSI	062372	062381	062375	062384	062378	062387
LSIG	062373	062382	062376	062385	062379	062388
LSIRc*			062377	062386		

* supplied with PR330/V and to be order with toroid for residual current protection 1SDA063869R1

X1N 10

Withdrawable (W) - MP

Iu (40 °C) = 1000 A Icu (415 V) = 65 kA Icw (1 s) = 42 kA

MP = Moving part						
LI	062407	062416	062410	062419		
LSI	062408	062417	062411	062420	062414	062423
LSIG	062409	062418	062412	062421	062415	062424
LSIRc*			062413	062422		

* supplied with PR330/V and to be order with toroid for residual current protection 1SDA063869R1

X1L 10

Withdrawable (W) - MP

Iu (40 °C) = 1000 A Icu (415 V) = 150 kA Icw (1 s) = 15 kA

MP = Moving part						
LI	062443	062452	062446	062455		
LSI	062444	062453	062447	062456	062450	062459
LSIG	062445	062454	062448	062457	062451	062460
LSIRc*			062449	062458		

* supplied with PR330/V and to be order with toroid for residual current protection 1SDA063869R1

X1B 12

Withdrawable (W) - MP

Iu (40 °C) = 1250 A Icu (415 V) = 42 kA Icw (1 s) = 42 kA

MP = Moving part						
LI	062479	062488	062482	062491		
LSI	062480	062489	062483	062492	062486	062495
LSIG	062481	062490	062484	062493	062487	062496
LSIRc*			062485	062494		

* supplied with PR330/V and to be order with toroid for residual current protection 1SDA063869R1

X1N 12

Withdrawable (W) - MP

Iu (40 °C) = 1250 A Icu (415 V) = 65 kA Icw (1 s) = 42 kA

MP = Moving part						
LI	062515	062524	062518	062527		
LSI	062516	062525	062519	062528	062522	062531
LSIG	062517	062526	062520	062529	062523	062532
LSIRc*			062521	062530		

* supplied with PR330/V and to be order with toroid for residual current protection 1SDA063869R1

X1L 12

Withdrawable (W) - MP

Iu (40 °C) = 1250 A Icu (415 V) = 150 kA Icw (1 s) = 15 kA

MP = Moving part						
LI	062551	062560	062554	062563		
LSI	062552	062561	062555	062564	062558	062567
LSIG	062553	062562	062556	062565	062559	062568
LSIRc*			062557	062566		

* supplied with PR330/V and to be order with toroid for residual current protection 1SDA063869R1

Fixed parts ..... **page 8/**14 **Terminals** .....**page 8/**19

Ordering codes

SACE Emax X1 automatic circuit-breakers

X1B 16

Withdrawable (W) - MP

Iu (40 °C) = **1600 A** Icu (415 V) = **42 kA** Icw (1 s) = **42 kA**

MP = Moving part	PR331/P 1SDA.....R1 3 Poles	PR331/P 1SDA.....R1 4 Poles	PR332/P 1SDA.....R1 3 Poles	PR332/P 1SDA.....R1 4 Poles	PR333/P 1SDA.....R1 3 Poles	PR333/P 1SDA.....R1 4 Poles
LI	062587	062596	062590	062599		
LSI	062588	062597	062591	062600	062594	062603
LSIG	062589	062598	062592	062601	062595	062604
LSIRc*			062593	062602		

* supplied with PR330/V and to be order with toroid for residual current protection 1SDA063869R1

X1N 16

Withdrawable (W) - MP

Iu (40 °C) = **1600 A** Icu (415 V) = **65 kA** Icw (1 s) = **42 kA**

MP = Moving part	PR331/P 1SDA.....R1 3 Poles	PR331/P 1SDA.....R1 4 Poles	PR332/P 1SDA.....R1 3 Poles	PR332/P 1SDA.....R1 4 Poles	PR333/P 1SDA.....R1 3 Poles	PR333/P 1SDA.....R1 4 Poles
LI	062623	062632	062626	062635		
LSI	062624	062633	062627	062636	062630	062639
LSIG	062625	062634	062628	062637	062631	062640
LSIRc*			062629	062638		

* supplied with PR330/V and to be order with toroid for residual current protection 1SDA063869R1

Fixed parts ..... **page 8/**14 **Terminals** .....**page 8/**19

Ordering codes

SACE Emax X1 switch-disconnectors

		1SDA.....R1 3 Poles	1SDA.....R1 4 Poles
X1B/MS 10 Fixed (F)	Iu (40 °C) = **1000 A** Icw (1s) = **42 kA**		
	F = Front terminals		
		062052	062053
X1B/MS 12 Fixed (F)	Iu (40 °C) = **1250 A** Icw (1s) = **42 kA**		
	F = Front terminals		
		062056	062057
X1B/MS 16 Fixed (F)	Iu (40 °C) = **1600 A** Icw (1s) = **42 kA**		
	F = Front terminals		
		062060	062061
X1B/MS 10 Withdrawable (W) - MP	Iu (40 °C) = **1000 A** Icw (1s) = **42 kA**		
	MP = Moving part		
		062054	062055
X1B/MS 12 Withdrawable (W) - MP	Iu (40 °C) = **1250 A** Icw (1s) = **42 kA**		
	MP = Moving part		
		062058	062059
X1B/MS 16 Withdrawable (W) - MP	Iu (40 °C) = **1600 A** Icw (1s) = **42 kA**		
	MP = Moving part		
		062062	062063

Fixed parts ..... **page 8/**14 **Terminals** .....**page 8/**19

1SDA.....R1

X1B/E 06

Iu (40 °C) = 630 A **Icu (1000 V AC) = 20 kA**

063501

Extracode to be specified with the X1B 06 standard version circuit-breaker code (Ue = 690 V AC) page 8/5 and 8/8
Please ask ABB SACE for availability.

X1B/E 08

Iu (40 °C) = 800 A **Icu (1000 V AC) = 20 kA**

063502

Extracode to be specified with the X1B 08 standard version circuit-breaker code (Ue = 690 V AC) page 8/5 and 8/8
Please ask ABB SACE for availability.

X1B/E 10

Iu (40 °C) = 1000 A **Icu (1000 V AC) = 20 kA**

063503

Extracode to be specified with the X1B 10 standard version circuit-breaker code (Ue = 690 V AC) page 8/6 and 8/9
Please ask ABB SACE for availability.

X1B/E 12

Iu (40 °C) = 1250 A **Icu (1000 V AC) = 20 kA**

063504

Extracode to be specified with the X1B 12 standard version circuit-breaker code (Ue = 690 V AC) page 8/6 and 8/9
Please ask ABB SACE for availability.

X1B/E 16

Iu (40 °C) = 1600 A **Icu (1000 V AC) = 20 kA**

063505

Extracode to be specified with the X1B 16 standard version circuit-breaker code (Ue = 690 V AC) page 8/7 and 8/10
Please ask ABB SACE for availability.

1SDA.....R1

X1B/E MS 10

Iu (40 °C) = 1000 A **Icw (1 s) = 20 kA**

063503

Extracode to be specified with the X1B MS 10 standard version circuit-breaker code (Ue = 690 V AC) page 8/11
Please ask ABB SACE for availability.

X1B/E MS 12

Iu (40 °C) = 1250 A **Icw (1 s) = 20 kA**

063504

Extracode to be specified with the X1B MS 12 standard version circuit-breaker code (Ue = 690 V AC) page 8/11
Please ask ABB SACE for availability.

X1B/E MS 16

Iu (40 °C) = 1600 A **Icw (1 s) = 20 kA**

063505

Extracode to be specified with the X1B MS 16 standard version circuit-breaker code (Ue = 690 V AC) page 8/11
Please ask ABB SACE for availability.

Ordering codes

Fixed parts and conversion kits for fixed circuit-breaker and fixed parts

Fixed part

Type	1SDA.....R1 3 Poles	1SDA.....R1 4 Poles
X1 FP W EF	062045	062049
X1 FP W HR/VR	062044	062048
X1 FP W HR-EF	062046	062050
X1 FP W EF-HR	062047	062051

Note: To order the HR/VR terminals installed vertically, the extra code 1SDA063571R1 must be specified. The sliding contact blocks for the fixed part are never supplied as standard, but must be ordered separately (see page 4/14).

Terminals for fixed parts

Type	3 pieces	4 pieces
EF X1	062171	062172
HR/VR X1	063089	063090
RS X1	063577*	063578*
ES X1	065620	065621

Note: Each kit fits both upper and lower applications. To convert a complete circuit breaker order 2 kits.
*can be ordered already installed on the fixed part, starting from the codes for the FP that fit HR terminals.

Sliding contacts blocks

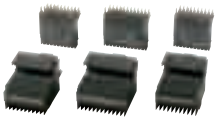

Type	1SDA.....R1
Lef block - **MP X1**	062164
Central block - **MP X1**	062165
Right block - **MP X1**	062166
Lef block - **FP X1**	062167
Central block - **FP X1**	062168
Right block - **FP X1**	062169

Note: The moving part of a circuit-breaker fitted with electrical accessories foresees standard supply of the blocks needed for connection. On the contrary, the blocks for the fixed part are never supplied as standard, but must be ordered separately.

1SDA.....R1

Electrical accessories

Shunt opening release - SOR

SOR	24 V AC / DC	062065
SOR	30 V AC / DC	062066
SOR	48 V AC / DC	062067
SOR	60 V AC / DC	062068
SOR	110...120 V AC / DC	062069
SOR	120...127 V AC / DC	063547
SOR	220...240 V AC / DC	063548
SOR	240...250 V AC / DC	062070
SOR	380...400 V AC	062071
SOR	415...440 V AC	062072

Note: the sliding contact blocks for the moving part and fixed part are needed in the withdrawable version (see page 4/14).

SOR Test Unit

SOR Test Unit	050228

Shunt closing release - SCR

SCR	24 V AC / DC	062076
SCR	30 V AC / DC	062077
SCR	48 V AC / DC	062078
SCR	60 V AC / DC	062079
SCR	110...120 V AC / DC	062080
SCR	120...127 V AC / DC	063549
SCR	220...240 V AC / DC	063550
SCR	240...250 V AC / DC	062081
SCR	380...400 V AC	062082
SCR	415...440 V AC	062083

Note: the sliding contact blocks for the moving part and fixed part are needed in the withdrawable version (see page 4/14).

Undervoltage release - UVR

UVR	24 V AC / DC	062087
UVR	30 V AC / DC	062088
UVR	48 V AC / DC	062089
UVR	60 V AC/DC	062090
UVR	110...120 V AC / DC	062091
UVR	120...127 V AC / DC	063551
UVR	220...240 V AC / DC	063552
UVR	240…250 V AC / DC	062092
UVR	380...400 V AC	062093
UVR	415...440 V AC	062094

Note: the sliding contact blocks for the moving part and fixed part are needed in the withdrawable version (see page 4/14).

Time delay device for undervoltage release - UVD

UVD	24…30 V DC	038316
UVD	48 V AC / DC	038317
UVD	60 V AC / DC	038318
UVD	110...125 V AC / DC	038319
UVD	220...250 V AC / DC	038320

Spring charging motor - M

M	24…30 V AC/DC	062113
M	48…60 V AC/DC	062114
M	100…130 V AC/DC	062115
M	220…250 V AC/DC	062116
M	380…415 V AC	062117

Note: the sliding contact blocks for the moving part and fixed part are needed in the withdrawable version (see page 4/14).

Ordering codes

SACE Emax X1 accessories

1SDA.....R1

Trip reset

Trip reset	24-30V AC/DC	063554
Trip reset	110-130V AC/DC	062118
Trip reset	200-240V AC/DC	062119

Note: the sliding contact blocks for the moving part and fixed part are needed in the withdrawable version (see page 4/14)
For ordering with the code 1SDA063553R1 AUX-SA 250 V AC.

Auxiliary contacts - AUX

auxiliary contacts (open/close)		
	AUX 2Q 24 V DC	062101
	AUX 2Q 400 V AC (1)	062102
electrical signalling of electronic trip unit tripped		
	AUX-SA 250V AC	063553
auxiliary contact circuit breaker ready to close (2)		
	AUX-RTC 24V DC	062108
	AUX-RTC 250V AC/DC	062109
auxiliary contact signalling spring charged		
	AUX-SC 24V DC	062106
	AUX-SC 250V AC/DC	062107

(1) always supplied with automatic circuit-breakers; to be ordered separately with the switch-disconnector
(2) in the withdrawable version where the sliding contact blocks for the moving and fixed part are necessary (see page 4/14)

Additional external auxiliary contacts

15 additional auxiliary contacts	064570
15 auxiliary contacts for additional digital signals	064571

Nota: not compatible with mechanical locks on compartment doors or mechanical interlocks; they must be ordered with one of the interlock plates.

Auxiliary position contacts - AUP

AUP X1	24V DC	062110
AUP X1	250V AC	062111

Note: for installing on the fixed part of a withdrawable circuit breaker.

Mechanical accessories

Mechanical operation counter - MOC

Mechanical operation counter	062160

Padlock in open position lock - PLL

PLL - padlock in open position lock	062152

Key lock in open position on the circuit-breaker - KLC

KLC-D - different lock	063562
KLC-S - same key for different groups of circuit-breakers (N. 20005)	063563
KLC-S - same key for different groups of circuit-breakers (N. 20006)	063564
KLC-S - same key for different groups of circuit-breakers (N. 20007)	063565
KLC-S - same key for different groups of circuit-breakers (N. 20008)	063566
KLC-C - arrangement for Castell key lock	062147
KLC-K - arrangement for Kirk key lock	062148
KLC-R - arrangement for Ronis Profalux key lock	062149

Key lock in racked-in/racked-out/racked-out for test position

For 1 circuit-breaker – different key	062153
For groups of circuit-breakers – same key (N. 20005)	062154
For groups of circuit-breakers – same key (N. 20006)	062155
For groups of circuit-breakers – same key (N. 20007)	062156
For groups of circuit-breakers – same key (N. 20008)	062157
KLF-FP - prepared for Ronis	063567
KLF-FP - prepared for Castell	063568
KLF-FP - prepared for Kirk	063569
KLF-FP - prepared for Profalux	063570

Note: for installing on the fixed part of a withdrawable circuit breaker. The fixed part can be fitted with two different key-operated locks as additional accessories.

Accessory for lock in racked-out position

Lock in racked-out position	062158

Note: for ordering in addition to the inserted/test/withdrawn circuit breaker lock if you want to be able to lock it in the withdrawn position.

Mechanical lock on compartment door

Mechanical lock on cable compartment door (1)	062159
Direct mechanical lock on compartment door for wall-mounted fixed circuit-breaker	063722
Direct mechanical on compartment door for floor-mounted fixed circuit-breaker	063723
Direct mechanical on compartment door for withdrawable circuit-breaker	063724

(1) To be ordered with cable kit for interlock and interlocking plate compatible with the circuit-breaker
Note: a circuit breaker fitted with the mechanical compartment door lock cannot be interlocked with another circuit breaker or fitted with the 15 additional auxiliary contacts.

Mechanical interlock with cables between two circuit-breakers

Cables kit for interlock T7/X1 (1)	062127
Cables kit for interlock E1/6 - T7/X1 (1)	064568
Plate for fixed	062129
Plate for fixed - on bottom plate	062130
Plate for withdrawable	062131

Note: To interlock two circuit-breakers you have to order a cables kit and two plates in function of the version of the circuit breaker
(1) not compatible with the mechanical compartment door lock or 15 additional auxiliary contacts.

Transparent protection for buttons

Transparent protection for buttons	062132
Transparent protection for buttons - independent	062133

IP54 door protection

IP54 door protection – same key (N.20005)	062161

Ordering codes

SACE Emax X1 accessories

Connections terminals

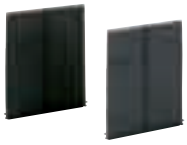

High insulating terminal covers - HTC

	1SDA.....R1 3 Poles	4 Poles
HTC X1	063091	063092

Low insulating terminal covers - LTC

LTC X1 F	063093	063094
LTC X1 W	063095	063096

Separating partitions - PB

PB 100 low (H = 100 mm) - 4 pieces 3P	054970
PB 100 low (H = 100 mm) - 6 pieces 4P	054971
PB 200 high (H = 200 mm) - 4 pieces 3P	054972
PB 200 high (H = 200 mm) - 6 pieces 4P	054973

	1SDA.....R1 3 pieces	4 pieces	6 pieces	8 pieces

Front extended terminals - EF

EF X1	063103	063104	063105	063106

Front terminals for copper-aluminium cables - FC CuAl

FC CuAl X1 630 2x240mm^2	063865	063866	063867	063868
FC CuAl X1 1250 4x240mm^2	063112	063113	063114	063115

Front terminals - F (1)

F X1 - Plugs with screws	063099	063100	063101	063102

(1) To be requested as loose kit

Front extended spread terminals - ES

ES X1 (1/2 upper kit)	063107			
ES X1 (1/2 lower kit)	063108			
ES X1		063109	063110	063111

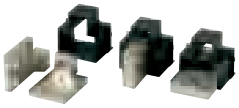

Rear adjustable terminals - R

R X1	063116	063117	063118	063119

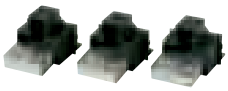

Rear flat horizontal terminals - HR

HR X1	063120	063121	063122	063123

Rear flat vertical terminals - VR

VR X1	063124	063125	063126	063127

8

Ordering codes

SACE Emax X1 accessories



PR331/P	PR332/P	PR333/P
1SDA.....R1	1SDA.....R1	1SDA.....R1

Electronic trip units

LI	063131	063134	
LSI	063132	063135	063138
LSIG	063133	063136	063139
LSIRc (*)		064190	

(*) always supplied with PR330/V voltage measuring module.

1SDA.....R1

Modules for PR33x electronic trip unit

HMI030 interface on the front of switchgear	063143
PR330/V voltage measuring module	063574
PR330/D-M communication module (Modbus RTU)	063145
PR330/R actuator unit (1)	063146
BT030 external wireless communication unit	058259
PR030B power supply unit	058258
Internal voltage sockets for PR332/P with PR330/V module and for PR333/P*	063573
AUX-MCR **	065235

(1) for ordering with PR330/D-M.
(*) can only be ordered mounted on the circuit-breaker. See page 3/34.
(**) can only be ordered mounted on the circuit-breaker.

Current sensor for external neutral

Current sensor for external neutral - X1 In = 400…1600 A	063159

Homopolar sensor for centre star of the transformer

Homopolar sensor	059145

Toroid for residual current protection

Rc Toroid	063869

Rating plug

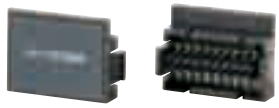

In=400A	063147
In=630A	063148
In=800A	063149
In=1000A	063150
In=1250A	063151
In=1600A	063152
In=400A for Rc protection (*)	063725
In=630A for Rc protection (*)\	063726
In=800A for Rc protection (*)	063727
In=1000A for Rc protection (*)	063728
In=1250A for Rc protection (*)	063731
In=1600A for Rc protection (*)	063732

(*) for PR332/P LSIRc, PR332/P LSIG with PR330/V or PR333/P LSIG and toroid for residual current protection (see page 4/11)

Extracode rating plug

In=400A	063153
In=630A	063154
In=800A	063155
In=1000A	063156
In=1250A	063157
In=400A for Rc protection (*)	063733
In=630A for Rc protection (*)	063734
In=800A for Rc protection (*)	063735
In=1000A for Rc protection (*)	063736
In=1250A for Rc protection (*)	063737
In=1600A for Rc protection (*)	064228

(*) for PR332/P LSIRc or PR333/P LSIG and toroid for residual current protection (see page 4/11)

Accessories for electronic trip units

PR010/T - Test and configuration unit for electronic trip units type PR33x	048964 (1)
EP010 - Module interface for PR33x	059469 (1)
PR021/K - Signalling unit	059146

(1) ask ABB SACE for PR010/T and EP010 availability

Ordering codes

SACE Emax X1 accessories

Spare parts

Flanges for compartment door

	1SDA.....R1
Flange for compartment door for X1 fixed	063160
Flange for compartment door for X1 withdrawable	063161
Flange for compartment door (W = 400 mm) for X1 withdrawable	065920

Single terminal

	1SDA.....R1
Single terminal for X1	062170

Adapter of the PR33x protection unit

	1SDA.....R1
Adapter for PR33x	063142

Note: it is always supplied with the circuit-breaker

Conversion kits from fixed to MP version

	1SDA.....R1 3 Poles	1SDA.....R1 4 Poles
Kit W MP X1	062162	062163

Auxiliary units

Automatic transfer switch ATS010

	1SDA.....R1
ATS010	052927

Software

SD-VIEW 2000 Software

	1SDA.....R1
SD-VIEW 2000 Software	060549
SD-VIEW 2000 Software - 5000 Tags License	060550
SD-VIEW 2000 Software - 10000 Tags License	060551
SD-VIEW 2000 Software - 20000 Tags License	064106

Due to possible developments of standards as well as of materials, the characteristics and dimensions specified in the present catalogue may only be considered binding after confirmation by ABB SACE.

1SDC200009D0203 - 07/2008
Printed in Italy
5.000 - CAL

ABB SACE
A division of ABB S.p.A.

L.V. Breakers
Via Baioni, 35
24123 Bergamo - Italy
Tel.: +39 035.395.111 - Telefax: +39 035.395.306-433

http://www.abb.com