DC LONG SENSING DISTANCE PROXIMITY SWITCH

ϕ6.5		M 8		Q8	
●	○	●	○	●	●
3 mm	6 mm	3 mm	6 mm	3 mm	
Stainless steel or nickel plated brass		Stainless steel or nickel plated brass		die-cast	
●		●		●	

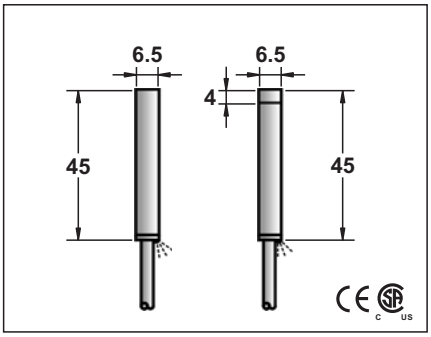

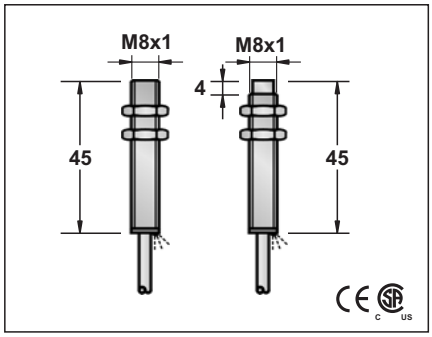

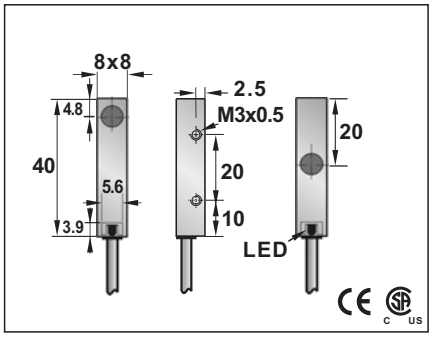

10-30VDC			10-30VDC			10-30VDC		
<10%			<10%			<10%		
<10mA			<10mA			<10mA		
200mA			200mA			200mA		
<0.01mA			<0.01mA			<0.01mA		
-			-			-		
-			-			-		
<2.0V			<2.0V			<2.0V		
1KHZ			1KHZ			1KHZ		
0.1ms/0.1ms			0.1ms/0.1ms			0.1ms/0.1ms		
<15%(Sr)			<15%(Sr)			<15%(Sr)		
<2.0%(Sr)			<2.0%(Sr)			<2.0%(Sr)		
IP67			IP67			IP67		
-25°C - +70°C			-25°C - +70°C			-25°C - +70°C		
<10%(Sr)			<10%(Sr)			<10%(Sr)		
YES			YES			YES		
220mA			220mA			220mA		
<10ms			<10ms			<10ms		
RFI>3V/m / EFT>1KV / ESD>4KV (contact)			RFI>3V/m / EFT>1KV / ESD>4KV (contact)			RFI>3V/m / EFT>1KV / ESD>4KV (contact)		
IEC 60947-5-2,Part 7.4.1 / IEC 60947-5-2,Part 7.4.2			IEC 60947-5-2,Part 7.4.1 / IEC 60947-5-2,Part 7.4.2			IEC 60947-5-2,Part 7.4.1 / IEC 60947-5-2,Part 7.4.2		
POM			POM			POM		
LCM1-D0603N-A3U2	1	LCM2-D0606N-A3U2	LCM1-0803N-A3U2	1	LCM2-0806N-A3U2	LQM1-8803N-A3U2T	1	LQM1-8803N-A3U2M
LCM1-D0603N-B3U2	2	LCM2-D0606N-B3U2	LCM1-0803N-B3U2	2	LCM2-0806N-B3U2	LQM1-8803N-B3U2T	2	LQM1-8803N-B3U2M
LCM1-D0603P-A3U2	3	LCM2-D0606P-A3U2	LCM1-0803P-A3U2	3	LCM2-0806P-A3U2	LQM1-8803P-A3U2T	3	LQM1-8803P-A3U2M
LCM1-D0603P-B3U2	4	LCM2-D0606P-B3U2	LCM1-0803P-B3U2	4	LCM2-0806P-B3U2	LQM1-8803P-B3U2T	4	LQM1-8803P-B3U2M
LCM1-D0603NU	21	LCM2-D0606NU	LCM1-0803NU	21	LCM2-0806NU	LQM1-8803NUT	21	LQM1-8803NUM
						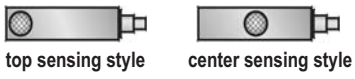	
						top sensing style	center sensing style	
3ϕ3x0.15			3ϕ3x0.15			3ϕ3X0.15		
Approx.36 g			Approx.40 g			Approx.38 g		

Note:
Coming Soon : Part numbers with underline