DC METAL FACE LONG SENSING DISTANCE PROXIMITY SWITCH

M 8	
●	○
3 mm	6 mm
Stainless steel	
●	
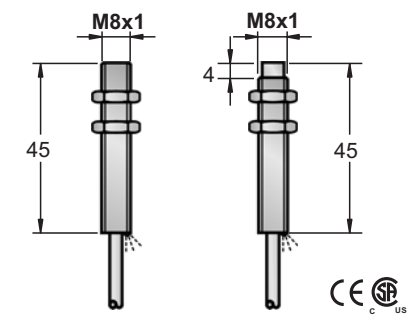	
10-30VDC or 10-55VDC	
<10%	
<10mA	
200mA	
<0.01mA	
-	
-	
<1.5V	
500HZ	
0.1ms/0.1ms	
<15%(Sr)	
<1.0%(Sr)	
IP67	
-25 °C - +70°C	
<10%(Sr)	
YES	
220mA	
<10ms	
RFI>3V/m / EFT>1KV / ESD>4KV (contact)	
IEC 60947-5-2,Part 7.4.1 / IEC 60947-5-2,Part 7.4.2	
Stainless steel	

LCS1-0803N-A3U2	1	LCS2-0806N-A3U2
LCS1-0803N-B3U2	2	LCS2-0806N-B3U2
LCS1-0803P-A3U2	3	LCS2-0806P-A3U2
LCS1-0803P-B3U2	4	LCS2-0806P-B3U2

3 ϕ 3x0.15	
Approx.33 g	Approx.32 g

M 8	
●	○
3 mm	6 mm
Stainless steel	
●	
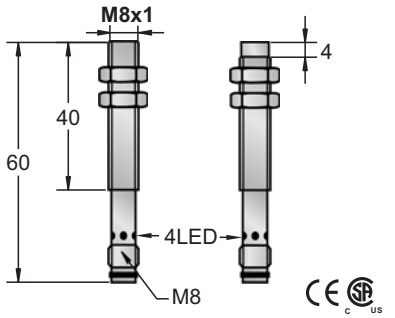	
10-30VDC or 10-55VDC	
<10%	
<10mA	
200mA	
<0.01mA	
-	
-	
<1.5V	
500HZ	
0.1ms/0.1ms	
<15%(Sr)	
<1.0%(Sr)	
IP67	
-25 °C - +70°C	
<10%(Sr)	
YES	
220mA	
<10ms	
RFI>3V/m / EFT>1KV / ESD>4KV (contact)	
IEC 60947-5-2,Part 7.4.1 / IEC 60947-5-2,Part 7.4.2	
Stainless steel	

LCS1-0803N-ACU3	29	LCS2-0806N-ACU3
LCS1-0803N-BCU3	29	LCS2-0806N-BCU3
LCS1-0803P-ACU3	30	LCS2-0806P-ACU3
LCS1-0803P-BCU3	30	LCS2-0806P-BCU3

Approx.28 g	Approx.26 g

M 8	
●	○
3 mm	6 mm
Stainless steel	
●	
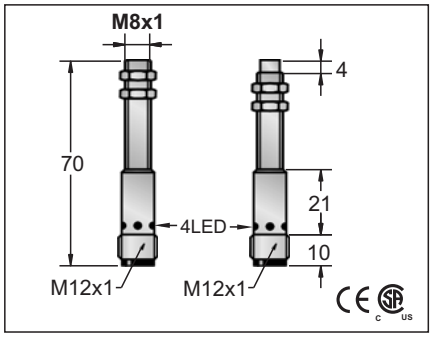	
10-30VDC or 10-55VDC	
<10%	
<10mA	
200mA	
<0.01mA	
-	
-	
<1.5V	
500HZ	
0.1ms/0.1ms	
<15%(Sr)	
<1.0%(Sr)	
IP67	
-25 °C - +70°C	
<10%(Sr)	
YES	
220mA	
<10ms	
RFI>3V/m / EFT>1KV / ESD>4KV (contact)	
IEC 60947-5-2,Part 7.4.1 / IEC 60947-5-2,Part 7.4.2	
Stainless steel	

LCS1-0803N-ARU4	33	LCS2-0806N-ARU4
LCS1-0803N-BRU4	34	LCS2-0806N-BRU4
LCS1-0803P-ARU4	35	LCS2-0806P-ARU4
LCS1-0803P-BRU4		LCS2-0806P-BRU4

Approx.33 g	Approx.32 g